TANDY 200
TELCOM Manual

Cat. No. 26-3860

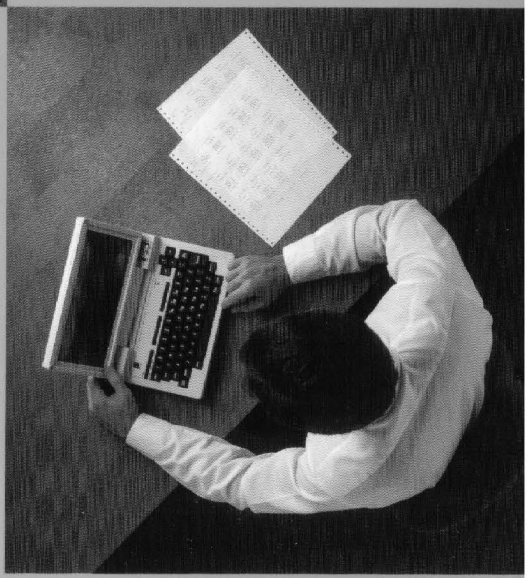

The FCC Wants You to Know . . . This equipment has been certified to comply with the limits for a Class B computing device, pursuant to Subpart J of Part 15 of FCC Rules. Only peripherals (computer input/output devices, terminals, printers, etc.) that are certified to comply with the Class B limits may be attached to this computer. Operation with non-certified peripherals is likely to result in interference to radio and TV reception. If this occurs, try relocating the receiving antenna, or relocating the computer.

Tandy® 200 Software:
© 1985 Microsoft Incorporated.
All Rights Reserved.
The software in the Tandy 200 microcomputer is retained in a read-only memory (ROM) format. All portions of this software, whether in the ROM format or other source code form format, and the ROM circuitry, are copyrighted and are the proprietary and trade secret information of Tandy Corporation and Microsoft. Use, reproduction or publication of any portion of this material without the prior written authorization by Tandy Corporation is strictly prohibited.

Tandy® 200 Telcom Manual
© 1984 Tandy Corporation
All Rights Reserved.
Reproduction or use, without express written permission from Tandy Corporation and/or its licensor, of any portion of this manual is prohibited. While reasonable efforts have been taken in the preparation of this manual to assure its accuracy, Tandy Corporation assumes no liability resulting from any errors or omissions in this manual, or from the use of the information contained herein.

TERMS AND CONDITIONS OF SALE AND LICENSE OF TANDY COMPUTER EQUIPMENT AND SOFTWARE PURCHASED FROM RADIO SHACK COMPANY-OWNED COMPUTER CENTERS, RETAIL STORES AND RADIO SHACK FRANCHISEES OR DEALERS AT THEIR AUTHORIZED LOCATIONS

LIMITED WARRANTY

I. CUSTOMER OBLIGATIONS

A. CUSTOMER assumes full responsibility that this computer hardware purchased (the "Equipment"), and any copies of software included with the Equipment or licensed separately (the "Software") meets the specifications, capacity, capabilities, versatility, and other requirements of CUSTOMER.

B. CUSTOMER assumes full responsibility for the condition and effectiveness of the operating environment in which the Equipment and Software are to function, and for its installation.

II. LIMITED WARRANTIES AND CONDITIONS OF SALE

A. For a period of ninety (90) calendar days from the date of the Radio Shack sales document received upon purchase of the Equipment, RADIO SHACK warrants to the original CUSTOMER that the Equipment and the medium upon which the Software is stored is free from manufacturing defects. **This warranty is only applicable to purchases of Tandy Equipment by the original customer from Radio Shack company-owned computer centers, retail stores, and Radio Shack franchisees and dealers at their authorized locations.** The warranty is void if the Equipment's case or cabinet has been opened, or if the Equipment or Software has been subjected to improper or abnormal use. If a manufacturing defect is discovered during the stated warranty period, the defective Equipment must be returned to a Radio Shack Computer Center, a Radio Shack retail store, a participating Radio Shack franchisee or a participating Radio Shack dealer for repair, along with a copy of the sales document or lease agreement. The original CUSTOMER'S sole and exclusive remedy in the event of a defect is limited to the correction of the defect by repair, replacement, or refund of the purchase price, at RADIO SHACK'S election and sole expense. RADIO SHACK has no obligation to replace or repair expendable items.

B. RADIO SHACK makes no warranty as to the design, capability, capacity, or suitability for use of the Software, except as provided in this paragraph. Software is licensed on an "AS IS" basis, without warranty. The original CUSTOMER'S exclusive remedy, in the event of a Software manufacturing defect, is its repair or replacement within thirty (30) calendar days of the date of the Radio Shack sales document received upon license of the Software. The defective Software shall be returned to a Radio Shack Computer Center, a Radio Shack retail store, a participating Radio Shack franchisee or Radio Shack dealer along with the sales document.

C. Except as provided herein no employee, agent, franchisee, dealer or other person is authorized to give any warranties of any nature on behalf of RADIO SHACK.

D. **EXCEPT AS PROVIDED HEREIN, RADIO SHACK MAKES NO EXPRESS WARRANTIES, AND ANY IMPLIED WARRANTY OF MERCHANTABILITY OR FITNESS FOR A PARTICULAR PURPOSE IS LIMITED IN ITS DURATION TO THE DURATION OF THE WRITTEN LIMITED WARRANTIES SET FORTH HEREIN.**

E. Some states do not allow limitations on how long an implied warranty lasts, so the above limitation(s) may not apply to CUSTOMER.

III. LIMITATION OF LIABILITY

A. **EXCEPT AS PROVIDED HEREIN, RADIO SHACK SHALL HAVE NO LIABILITY OR RESPONSIBILITY TO CUSTOMER OR ANY OTHER PERSON OR ENTITY WITH RESPECT TO ANY LIABILITY, LOSS OR DAMAGE CAUSED OR ALLEGED TO BE CAUSED DIRECTLY OR INDIRECTLY BY "EQUIPMENT" OR "SOFTWARE" SOLD, LEASED, LICENSED OR FURNISHED BY RADIO SHACK, INCLUDING, BUT NOT LIMITED TO, ANY INTERRUPTION OF SERVICE, LOSS OF BUSINESS OR ANTICIPATORY PROFITS OR CONSEQUENTIAL DAMAGES RESULTING FROM THE USE OR OPERATION OF THE "EQUIPMENT" OR "SOFTWARE." IN NO EVENT SHALL RADIO SHACK BE LIABLE FOR LOSS OF PROFITS, OR ANY INDIRECT, SPECIAL, OR CONSEQUENTIAL DAMAGES ARISING OUT OF ANY BREACH OF THIS WARRANTY OR IN ANY MANNER ARISING OUT OF OR CONNECTED WITH THE SALE, LEASE, LICENSE, USE OR ANTICIPATED USE OF THE "EQUIPMENT" OR "SOFTWARE."**
NOTWITHSTANDING THE ABOVE LIMITATIONS AND WARRANTIES, RADIO SHACK'S LIABILITY HEREUNDER FOR DAMAGES INCURRED BY CUSTOMER OR OTHERS SHALL NOT EXCEED THE AMOUNT PAID BY CUSTOMER FOR THE PARTICULAR "EQUIPMENT" OR "SOFTWARE" INVOLVED.

B. RADIO SHACK shall not be liable for any damages caused by delay in delivering or furnishing Equipment and/or Software.

C. No action arising out of any claimed breach of this Warranty or transactions under this Warranty may be brought more than two (2) years after the cause of action has accrued or more than four (4) years after the date of the Radio Shack sales document for the Equipment or Software, whichever first occurs.

D. Some states do not allow the limitation or exclusion of incidental or consequential damages, so the above limitation(s) or exclusion(s) may not apply to CUSTOMER.

IV. SOFTWARE LICENSE

RADIO SHACK grants to CUSTOMER a non-exclusive, paid-up license to use the TANDY Software on **one** computer, subject to the following provisions:

A. Except as otherwise provided in this Software License, applicable copyright laws shall apply to the Software.

B. Title to the medium on which the Software is recorded (cassette and/or diskette) or stored (ROM) is transferred to CUSTOMER, but not title to the Software.

C. CUSTOMER may use Software on one host computer and access that Software through one or more terminals if the Software permits this function.

D. CUSTOMER shall not use, make, manufacture, or reproduce copies of Software except for use on **one** computer and as is specifically provided in this Software License. Customer is expressly prohibited from disassembling the Software.

E. CUSTOMER is permitted to make additional copies of the Software **only** for backup or archival purposes or if additional copies are required in the operation of **one** computer with the Software, but only to the extent the Software allows a backup copy to be made. However, for TRSDOS Software, CUSTOMER is permitted to make a limited number of additional copies for CUSTOMER'S own use.

F. CUSTOMER may resell or distribute unmodified copies of the Software provided CUSTOMER has purchased one copy of the Software for each one sold or distributed. The provisions of this Software License shall also be applicable to third parties receiving copies of the Software from CUSTOMER.

G. All copyright notices shall be retained on all copies of the Software.

V. APPLICABILITY OF WARRANTY

A. The terms and conditions of this Warranty are applicable as between RADIO SHACK and CUSTOMER to either a sale of the Equipment and/or Software License to CUSTOMER or to a transaction whereby Radio Shack sells or conveys such Equipment to a third party for lease to CUSTOMER.

B. The limitations of liability and Warranty provisions herein shall inure to the benefit of RADIO SHACK, the author, owner and or licensor of the Software and any manufacturer of the Equipment sold by Radio Shack.

VI. STATE LAW RIGHTS

The warranties granted herein give the **original** CUSTOMER specific legal rights, and the **original** CUSTOMER may have other rights which vary from state to state.

8-84

To Our Customers

TELCOM lets you communicate with other computers. This gives you the opportunity to do many exciting, practical, and widely-varying applications.

To help you find the instructions you need, this manual contains 2 complete and self-sufficient sections:

- Section I shows how to communicate with public-access computers such as CompuServe and Dow Jones.
- Section II shows how to communicate with private computers, such as an office computer or a private timesharing computer.

If you encounter a problem or need to look up specific information about TELCOM, refer to the references in the back of this manual.

Contents

Section I/ Communicating with Public-Access Computers 1

1/ Subscribing to Public Computer Services 3

2/ Connecting to Public Computer Services 9

3/ Retrieving Information—A Sample Session with CompuServe 17

4/ Sending Electronic Mail—A Sample Session with CompuServe 21

5/ Using Public Bulletin Boards 25

6/ Automatically Dialing and Logging On 29

Section II/ Communicating with Private Computers 35

7/ Which Computers can Communicate with TELCOM 37

8/ Setting Communication Parameters 45

9/ Connecting with the Built-in Modem 51

10/ Connecting with a Direct Cable 57

11/ Connecting with an External Modem 61

12/ Communicating and Exchanging Files 65

13/ Sample Sessions 71

References

Reference A/ TELCOM Function Keys 78

Reference B/ TELCOM Codes 79

Reference C/ Help 88

Section I/ Communicating with Public-Access Computers

This section is a tutorial. It shows how to subscribe to and connect to public-access computers. It also shows how to use some useful functions of TELCOM's while communicating with public-access computers.

We suggest you first read the *Tandy 200 Owner's Manual*, because it shows how to create a text file, autodial, and subscribe to CompuServe. We then suggest that you read all 5 chapters of this section in the order in which they are presented.

Chapter 1/
Subscribing to Public Computer Services

This chapter gives an overview of the kinds of public computer services that are available in the continental United States. It also explains how to make the necessary arrangements to use these services.

How Public Computer Services Work

Public computer services offer subscriptions to useful services, such as news and electronic mail, that can easily be accessed by small computers.

To access these services, you usually need to call the telephone number of a third party—a computer network. First you call and connect to the network. The network then "relays" a connection between you and the service.

Which telephone number you can use to make this connection depends on the service. Many services let you use the telephone numbers of large public networks—such as Tymnet® and Telenet® , in the United States, and Datapac, in Canada. These large networks consist of hundreds of local numbers all across the country.

After you connect to a service, you normally need to "logon." This requires that you enter certain information—such as a password—that the service needs to give you. When finished using the service, you normally need to "logoff."

CompuServe

CompuServe Information Service® is a large multi-purpose computer service. Its services include news, shopping, electronic mail, conferencing, bulletin boards, and financial quotations.

The *Tandy 200 Owner's Manual* shows how to subscribe and connect to CompuServe using the free subscription that comes with the Tandy 200 modem cable. It also shows how to sign up for continued services with CompuServe.

As stated in the *Owner's Manual*, after using your free hour with CompuServe, CompuServe charges you only for the time you spend online with it. At this writing, CompuServe's charges for normal online time are $6.00/hour—standard time and $12.50/hour—prime time.

To connect to CompuServe, CompuServe lets you use its own network, as shown in the *Owner's Manual*, or 3 large public networks—Telenet, Tymnet, and Datapac. You may want to use a public network if CompuServe's network does not have a local number in your area.

To find out if any of the public networks has a local number in your area, call CompuServe—(800/848-8199 or, in Ohio, 614/457-0802). Then, whenever you want to use the public network to access CompuServe, simply call the number of the public network, rather than CompuServe, and connect to CompuServe as instructed in the next chapter.

When you use a public network to connect to CompuServe, CompuServe will add the network's cost to your bill. At this writing, CompuServe's added charges for using Telenet or Tymnet are $2.00/hour—standard time and 10.00/hour—prime time.

When you access CompuServe through Datapac, you need to go through an intermediary network: Telenet, Tymnet, or CompuServe. CompuServe's added charge for using Datapac through Telenet are $10.50/hour, its added charge for using Datapac through Tymnet are $9/hour, and its added charge for using Datapac through CompuServe are $5.20-$9.20/hour. These charges apply to standard and prime time.

Dow Jones

Dow Jones News Retrieval® Service is a general-purpose computer service that specializes in financial data. Its financial data includes news, financial quotations, corporate earning estimates, company disclosures, weekly economic survey/updates, and *Wall Street Journal* highlights.

If you purchased the Tandy 200 modem cable, you can subscribe to Dow Jones and use its services for 1 hour, free of charge. Dow Jones will then charge you only for the time you spend online with it—You can get a list of these charges during your free hour with Dow Jones, as described below.

To subscribe to and immediately start using your free hour with Dow Jones, call Dow Jones (800/257-5114 or, in New Jersey or Canada, call 609/452-1511). You will need to give a "control number." This control number is on the upper right-hand corner of a Dow Jones form that comes with the Tandy 200 modem cable.

Dow Jones will give you (1) a password, and (2) a telephone number of a network. At this writing, Dow Jones lets you connect to it through 3 networks—Tymnet, Telenet, and Datapac—and includes the costs of these 3 networks in its rate structure.

After getting this information, connect to Dow Jones and get an introduction to its services, as instructed in the next chapter. Dow Jones will send you a well-documented manual on how to use all of its services.

The Source℠

The Source is a large multipurpose computer service. Its services are similar to those offered by CompuServe. One reason you may want to subscribe to The Source is to use its electronic mail service, called Source Mail. Unlike CompuServe's electronic mail service (Chapter 5), Source Mail places no limits on how large a document you can send.

The Source charges $100 to subscribe and a minimum monthly charge, at this writing, of $10. For basic online services in the continental United States, the Source charges $20.75/hour prime time and $7.75/hour non prime time.

To subscribe, call 800/336-3366 and get (1) a user ID, (2) a password, and (3) a telephone number of a network. At this writing, The Source lets you connect to it using 3 networks—Telenet, Uninet, and Datapac—and includes the cost of these networks in its rate structure.

You can then connect to The Source as instructed in the next chapter. The Source uses menus that are easy to understand and will also send you a well-documented manual on how to use its services.

Other Services

CompuServe, Dow Jones, and The Source are just a few of many public services. The following lists the kinds of services available. (To get a complete listing of public computer services, use an online directory such as the *Omni Online Data Base Directory*, published by MacMillan Publishing Company.)

- **News Services.** You can get comprehensive news by connecting to networks such as Newsnet (945 Haverford Road, Bryn Mawr, PA, 19010). Newsnet has about 200 newsletters from 30 different industries in its data bank.
- **Library Services.** You can access massive encyclopedia data bases by connecting to networks such as Dialog℠ Information Services (3460 Hillview Ave., Palo Alto, CA, 800/227-1927 or, in California, 800/932-5838), BRS Bibliographic Retrieval Services (1200 Route 7, Latham, NY 12110), and Orbit Information Retrieval Services (SDC Search Service, 2500 Colorado Ave, Santa Monica, CA 90406, 800/421-7229 or, in California, 800/352-6689).
- **Special Interest Networks.** You can access special data bases by connecting to networks such as Westlaw (West Publishing Company, 58 W. Kellogg Blvd., P.O. Box 43779, St. Paul, MN, 612/228-2429).
- **Hardcopy Electronic Mail Networks.** You can send electronic mail to a city and then have the mail printed and delivered by connecting to services such as MCI Mail Service (2000 M Street NW, Washington, DC, 20036, 800/624-2255) and the U.S Postal ECOM® Service (available through The Source, which is described above).
- **Telex Networks.** You can send telexes as electronic mail by connecting to services such as ITT™ Timetran, RCA Global Communications (201 Centennial Ave., Box KC-8, Picataway, NJ, 08854, 800/526-3969) and Western Union Easylink (One Lake St., Upper Saddle River, NJ, 07458, 800/336-3797).

To use one of these services you need to contact the service, subscribe to it, and obtain the following information:

- The word length, parity, stop bit, and start/stop (XON/XOFF) enablement parameters to use when communicating with the service.
- The telephone number of a network you can use to connect to the service.
- The instructions for how to access, logon, and logoff the service.

You can then connect to the service, using the next chapter as your guide.

Chapter 2/
Accessing Public Computer Services

This chapter gives the general instructions for connecting and disconnecting to any public computer service and gives specific instructions for CompuServe, Dow Jones, and The Source.

Connecting to a Computer Service

Before you start, you need a way to connect the Tandy 200 to a normal telephone. You can use either the Tandy 200 modem cable (Cat. No. 26-1410) or the Tandy 200 acoustic coupler (Cat. No. 26-3805). You also need to make the necessary arrangements to access the service, as described in the last chapter.

1. Set TELCOM's Parameters

You see TELCOM's parameters when you see you first enter TELCOM. Unless you are autodialing, you do not need to be concerned with the last parameter—10 pps, 20 pps or T—but the others must be:

CompuServe: M7E1ENN, O
Dow Jones: M7E1DNN, O
The Source: M7E1ENN, O
Other Services: See instructions later in this chapter.

If you need to reset the parameters: Press [F3] and enter the new value. Example: [F3] **M7E1ENN,O** [ENTER]. Then display the new value by pressing [F3] [ENTER].

Note: *The owner's manual shows how to autodial.*

2. Connect to the telephone

Modem Cable: Connect in either of the ways shown below and set the DIR/ACP switch to DIR.

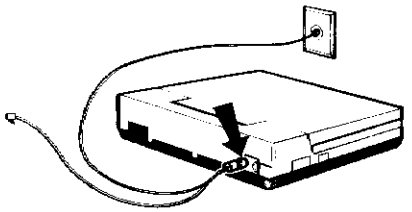

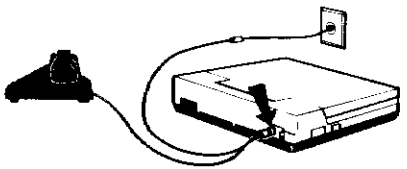

Acoustic Coupler: Connect the acoustic coupler to the Tandy 200 PHONE jack (on the rear of the Tandy 200) and set the DIR/ACP switch (on the left of the Tandy 200) to ACP.

3. Call the network.

The computer service needs to supply you with this telephone number.

4. Enter TELCOM's terminal mode.

When the network answers the phone, you hear a high-pitched tone. Press Term ([F4]). If using the acoustic coupler, place the phone in the coupler:

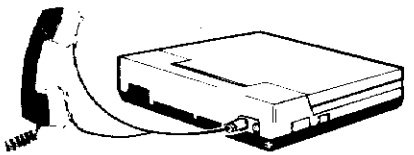

5. Wait for TELCOM's terminal function-key display

A few seconds after you press [F4] TELCOM establishes a terminal connection with the network and shows these functions on the bottom of your screen:

Prev Down Up Full BRK Bye

If these functions do not appear, TELCOM has not established a connection. Hang up the telephone and try again. Check that you have the right TELCOM parameter settings, telephone connections, and ACP/DIR settings.

Also check the telephone number you are using. Some networks have different telephone lines. You can use only a "300-baud" line.

You are now connected to the network and need to access and logon to the service. How you do this depends on which service you want to use.

Use these steps when connecting to CompuServe:

6. Access CompuServe

This step has you access CompuServe. When you see the CompuServe "User ID" prompt, go to Step 7.

Using the CompuServe network: Simply press [CTRL] [C] (Hold down [CTRL] while pressing [C].)

Using Tymnet: Tymnet will give you 2 prompts. Respond to the first by typing **A (Do not press** [ENTER].) The second prompt might have many meaningless characters. Respond to it by pressing [CTRL][P]. (Hold down [CTRL] while pressing [P].) Then enter one of these symbols: **CIS02, CIS03, CIS04, CPS01.** Example:

please type your terminal identifier: **A**
please log in: [CTRL] [P]
CPS01 [ENTER]

Using Telenet: Immediately after establishing a terminal connection with Telenet, press the (ENTER) key twice. Telenet will then give you 2 prompts. Respond to the first by entering **D1**. Respond to the second by entering one of these symbols: **C 202202** or **C 614227**. Example:

(ENTER) (ENTER)
TERMINAL = **D1** (ENTER)
@C 202202 (ENTER)

Using Datapac: Immediately after establishing a terminal connection with Datapac, press (·)(ENTER). Datapac will display a message similar to DATAPAC:9999 9999. Enter one of these codes, depending on which network you want to use as an intermediary network: **P 29400138** (CompuServe), **P 1 3106,CPS** (Tymnet), or **1311061400227** (Telenet). Then, if prompted for a host name, enter **CIS**. Example:

(·) (ENTER)
DATAPAC:9999 9999
P 29400138 (ENTER)
Host Name: **CIS** (ENTER)

7. Logon to CompuServe

CompuServe will give you 2 prompts. Respond to the first by entering your unique user ID. Respond to the second by entering your unique password. Example:

User ID: ***76338,448*** (ENTER)
Password: ***SECRET*** (ENTER)

You should now be connected to the CompuServe Information Service. The next chapter shows how to use this service.

Use these steps when connecting to Dow Jones:

6. Access Dow Jones

This step has you access Dow Jones. When you see the Dow Jones "WHAT SERVICE PLEASE?????" prompt, go to Step 7.

Using Tymnet: Tymnet will give you 2 prompts. Respond to the first by typing **A (Do not press** (ENTER)**.)** The second prompt might have many meaningless characters. Respond to it by pressing (CTRL)(P). (Hold down (CTRL) while pressing (P).) Then enter the symbol **DOW1;;**

please type your terminal identifier: **A**
please log in: **DOW1;;** (ENTER)

Using Telenet: Immediately after establishing a terminal connection with Telenet, press the (ENTER) key twice. Telenet will then give you 2 prompts. Respond to the first by entering **D1**. Respond to the second by entering the symbol **C 60942**:

(ENTER) (ENTER)
TERMINAL = **D1** (ENTER)
@C 60942 (ENTER)

Using Datapac: Immediately after establishing a terminal connection with Datapac, press (·)(·)(·)(ENTER). Datapac will display a message similar to DATAPAC:9999 9999. Type **13106,DOW1;;**(ENTER). Example:

(·)(·)(·) (ENTER)
DATAPAC:9999 9999
13106,DOW1;; (ENTER)

7. Logon to Dow Jones

Dow Jones will give you 2 prompts. Respond to the first by entering **DJNS**. Respond to the second by entering your unique password. Example:

WHAT SERVICE PLEASE?????? **DJNS** (ENTER)
ENTER PASSWORD: ***SECRET*** (ENTER)

You should now see some messages followed by the prompt "ENTER QUERY". This lets you know that are connected to the Dow Jones News Retrieval Service. If you have not yet received a manual from Dow Jones, respond to this prompt by typing **//INTRO** (ENTER):

ENTER QUERY
//INTRO (ENTER)

//INTRO gives an introduction to Dow Jones' services and lets you access a list of Dow Jones' current online charges. While using //INTRO, it may help to know that that you can return to the main //INTRO menu at any time by typing **M** (ENTER). It also may help to know that Dow Jones uses the word "RETURN" to refer to the (ENTER) key.

Use these steps when connecting to The Source:

6. Access The Source

This step has you access The Source. When you see The Source ">" prompt, go to Step 7.

Using Telenet: Immediately after establishing a terminal connection with Telenet, press the (ENTER) key twice. Telenet will then give you 2 prompts. Respond to the first by entering **D1**. Respond to the second by entering the symbol **C 30147**:

(ENTER) (ENTER)
TERMINAL = **D1** (ENTER)
@C 30147 (ENTER)

Using Uninet: Uninet will give you 2 prompts. Respond to the first by typing (ENTER)(·)(ENTER). Respond to the second by typing **S15** (ENTER):

? (ENTER)(·)(ENTER)
service: **S15** (ENTER)

Using Datapac: You need to contact The Source for instructions on how to access it through Datapac. These instructions vary according to your Source user ID.

7. Logon to The Source

The Source will give you 2 prompts. Respond to the first prompt simply by pressing (ENTER). Respond to the second by entering **ID** followed by your unique user ID and your unique password. Example:

> (ENTER)
ID *USER999 SECRET* (ENTER)

You should now be connected to The Source. If you have not yet received a manual from The Source, you can still use The Source by following its menu prompts. The Source uses menus and prompts that are easy to understand.

Disconnecting from a Computer Service

1. Logoff the computer service.

You need to logoff so the service will know to quit charging you for online time. How to do this depends on which service you are using.

CompuServe: At the "!" prompt, type: **BYE** (ENTER). (You can usually get to the "!" prompt by pressing (CTRL) (C).)

Dow Jones: Type **DISC** (ENTER).

The Source: At the command mode, type **OFF** (ENTER). (Depending on where you are within The Source, you can get to the command mode by pressing (CTRL) (P) or (CTRL) (C), or by typing **QUIT** (ENTER) or **STOP** (ENTER).)

2. Exit TELCOM's terminal mode.

Press (F8) and repond to TELCOM's "Disconnect?" prompt with (Y) (ENTER). TELCOM exits its "terminal mode" and returns to its "interactive" function-key display:

Find Call Stat Term Menu

Press (F8) to return to the Tandy 200 Main Menu.

Determining TELCOM's Parameters for Connecting to Other Services

Use the following to determine how to set TELCOM's communication parameters when communicating with services other than CompuServe, Dow Jones, and The Source:

M*wpsx*NN, O

The parameters that are *not* in italics—such as the "M" and the "O"—need to be set exactly as shown above. The parameters that are in italics—such as *w* and *p*—need to match the parameters used by the computer service.

w is the word length. TELCOM can use any of these parameters: 6, 7, or 8.

p is the parity. TELCOM can use any of these parameters: I (ignore), O (odd), E (even), N (none).

s is the stop bit. TELCOM can use either of these parameters: 1 or 2.

x is the start/stop (also called XON/XOFF) character enablement. TELCOM can use either of these parameters: E (enable start/stop characters) or D (disable start/stop characters)

For example, assume the service you subscribe to tells you that it uses the following parameters:

8-bit word length
no parity
1 stop bit
start/stop (or XON/XOFF) disabled

The TELCOM parameters you need to use are:

M8N1DNN, O

Chapter 3/ Retrieving Information—A Sample Session with CompuServe

This chapter is a sample session. The first part of this chapter shows how to retrieve information from CompuServe; the last part shows how to use some TELCOM keys that are useful when retrieving information from any computer service.

Using CompuServe Menus

Note: Although your session with CompuServe should closely resemble the one described in this chapter, do not expect it to be identical. CompuServe often revises or improves its menus and prompts.

Connect to CompuServe. (This chapter assumes that you have read the owner's manual and have connected to CompuServe at least one time.)

CompuServe normally starts by listing some highlights and then displaying a "top menu" similar to the one below. You can "return" to this top menu, whenever you see CompuServe's "!" prompt, by typing **T** (ENTER):

1. Home Services
2. Business & Financial
3. Personal Computing
4. Services for Professionals
5. The Electronic Mall (tm)
6. User Information
7. Index

From CompuServe's top menu, you can get anywhere within its data bases. For example, assume you want to get the latest business news stories. From the top menu:

- Choose the home services option and CompuServe displays a Home Services Menu.
- Choose the news/weather/sports option and CompuServe displays a News/Weather/Sports menu.
- Choose AP videotex wire option and CompuServe displays an AP Wire Menu.
- Choose the business news option and CompuServe displays a selection of business news stories.
- Choose a story and CompuServe displays your selected business news story.

Using CompuServe Pages

As you travel through CompuServe's menus, notice that CompuServe has each menu indexed with a page number. For example, the Home Services Menu is on page HOM-1; the News/Weather/Sports Menu is on page HOM-10.

Using CompuServe's GO command, followed by a page number, you can go directly to the page you need. For example, the News/Weather/Sports Menu is on page HOM-10; to go to this menu, type (at the "!" prompt) **GO HOM-10** (ENTER):

! GO HOM-10 (ENTER)

To find the numbers for all CompuServe's pages, go to the CompuServe index. At the "!" prompt, type **GO IND** (ENTER). Then select the option that lists all the indexed topics.

Notice that when you ask CompuServe to display a large volume of data, such as its index, it shows 1 page at a time. After each page:

- You can simply press (ENTER) to display the next page of data.

or

- In most cases, you can type **S** (ENTER) (CompuServe's "scroll" command) to scroll continuously through the remaining pages of data.

Using TELCOM's Start/Stop Keys

Before logging on to CompuServe, you set your communication parameters to M7E1ENN,O. The 5th parameter ("E") causes TELCOM to "enable" a protocal that CompuServe and many other computers use: the "start/stop" protocol.

The start/stop protocol gives a special meaning to these characters:

- (CTRL)(S)—a "stop transmission" character (also called "XOFF")
- (CTRL)(Q)—a "start transmission" character (also called "XON")

Try using the stop/start characters: While scrolling though the CompuServe index, press (CTRL) (S) and CompuServe immediately stops transmission. Press (CTRL) (Q) and CompuServe starts transmission where it left off. (Whenever you "press" (CTRL) characters be sure to hold down (CTRL) while pressing the next character.)

You can use the start/stop characters only when: (1) the other computer follows the start/stop protocol, and (2) the Tandy 200 has its start/stop parameter enabled.

Using TELCOM's Function Keys

TELCOM has 2 modes: 'interactive" and "terminal." Since you are connected to another computer, you are now in TELCOM's terminal mode. The terminal mode function keys are on the bottom of your screen:

Prev Down Up Full BRK Bye

As always, you can turn this function-key display on and off with (LABEL). You may want to turn it off to give you an extra line for displaying online information.

With the exception of the Upload key (described in the next chapter), all these keys are useful when retrieving information from a computer service.

Full/Half Duplex Key (F4)—If you accidentally enter Half with most computer services, you see double of every character you type: Press F4 to return to Full.

Previous Screen Key (F1)—Use this key, as an alternative to the start/stop key, when information scrolls off the screen faster than you can read. Press F1 to see the previous screen; then F1 again to return to the current screen. (TELCOM keeps 2 screens in memory at all times.)

BRK (F 7)—Use this key only if the service requires you to "send" a special kind of break signal. (CompuServe does not require this.)

Print Key (F5)—Use this key, if you have a printer connected, to get a "hardcopy" of online information. Press F5 and TELCOM immediately starts printing all online information. While this function is "on" you see "Print" highlighted at the bottom. To turn off this function, press F5 again.

Please note that the print function causes transmission to be much slower. The best way to get a hardcopy of online information is to "download" information into a text file, then print it.

Download Key (F2)—To save online information in a normal Tandy 200 text file, press F2; then enter a name with 6 or less characters. Example:

File to Download: **INDEX** ENTER

While the download function is on, you see "Down" highlighted at the bottom of the screen. To turn off this function, press F2 again or, when you run out of memory, TELCOM turns download off automatically.

After disconnecting from CompuServe you will see a new text file named INDEX.DO on the Main Menu—You can can enter, edit, or print INDEX.DO just as you can with any text file.

Chapter 4/ Sending Electronic Mail—A Sample Session with CompuServe

This chapter is also a sample session with CompuServe. It shows how to use the Tandy 200's "upload" function to send information—letters, memos, reports, or even chapters of books—to another computer as instant electronic mail.

How Electronic Mail Works

An electronic mail service typically lets you send text to the "mailbox" of any user on the system. Shortly after you send mail, the receiving user can then retrieve it. Some reasons for using electronic mail are:

- To send and receive mail quickly—In many cases, electronic mail costs less than that of a fast-delivery postal service.
- To transport information between computers—Electronic mail service can often be used by many kinds of computers; you can use this feature to transfer information to unlike computers.
- To temporarily store information—You can use electronic mail as a temporary storage area by storing information in your own mailbox.

This chapter uses CompuServe's EMAIL network as an example of an electronic mail service. To use EMAIL, you must be signed up for continued service with CompuServe.

Sending Mail

Note: Although your session with CompuServe should closely resemble the one described in this chapter, do not expect it to be identical. CompuServe often revises or improves its menus and prompts.

EMAIL expects you to send mail as follows: (1) First "compose" a message by typing it into EMAIL's workspace, and (2) then "send" the message to any CompuServe user's mailbox.

The charge for EMAIL is only the time you spend online with CompuServe. To save on online charges, we suggest you compose your message using TELCOM's Upload function: This function sends a pre-prepared text file to another computer just as if you were typing the text on the keyboard.

1. Create a pre-prepared text file to upload.

For this example, assume you want to send information to your home office about a prospective client. Enter the TEXT program and create a text file named CLIENT.DO containing this memo:

To: **Home Office**
From: **Mary**
Date: **June 10, 1985**
Re: **Adis Beverage Distribution**

Adis wants this system automated:

- **200 sales orders per day**
- **750-item customer list**
- **50-item vendor list**
- **300 invoices per month**
- **90-item inventory**

They need our proposal by July 1. George Jones, (213)888-1280, is our contact.

2. Enter EMAIL to compose and send a message.

Connect to CompuServe. Then:

- At the "!" prompt, type **GO EMA** (ENTER).
- At the Electronic Mail Menu, select the option to compose and send mail.
- At the Compose and Send Mail Menu, select the option that lets you "create" a new message using EDIT (also called FILGE).

EMAIL displays a reference number and waits for you to compose a message.

3. Upload the text file as your message.

For your message, use the text file you prepared earlier: Press the Tandy 200's Upload function key (F3). The Tandy 200 asks:

File to Upload?

Type the name of the text file you want to send, in this example type **CLIENT.DO** (ENTER). When the Tandy 200 asks "Width:", simply press (ENTER). You then see your text file being entered as your EMAIL message, just as if you were typing it.

4. Send the EMAIL message to a CompuServe user.

After you finish uploading the Tandy 200 text file, you need to tell EMAIL that you have finished composing your message. Type:

/EX (ENTER)

EMAIL then returns to the Compose and Send Menu. Select the option that lets you send a message (from your workspace).

EMAIL asks for a user ID as well as additional identifying information. In this example, send the message to your own mailbox by entering your own user ID number.

Receiving Mail

It takes CompuServe about 20-30 minutes to "deliver" the mail. After that, the next time you logon to CompuServe, you will be notified of your mail with this message:

You have mail

Anytime during your online session, you can retrieve your mail:

- At the "!" prompt, type **GO EMA** (ENTER)
- At the Electronic Mail Menu, select the option for read mail.

Before "reading" your mail, you may want to press TELCOM's download key ((F2)). This saves your mail in a Tandy 200 text file.

Using Other Electronic Mail Services

With CompuServe's EMAIL service, you have several limits: Your document can be no longer than 2,000 bytes (characters) and must be accessed within 30 days or else it is deleted.

Many other kinds of electronic mail services are available. Some let you send very large documents or deliver a "hard-copy" of your mail through the postal service. Other electronic mail services are listed in Chapter 1 of this manual.

Chapter 5/ Using Public Bulletin Boards

More than 100 computer bulletin boards, located across the United States and Canada, are available. This chapter shows how you can use these bulletin boards to share information and programs with other personal computer users.

How Public Bulletin Boards Work

Public bulletin boards are usually owned and operated by personal computer users as a service for other users. You can sometimes find telephone numbers of public bulletin board services in computer books and computer stores.

In addition, you can sometimes get telephone numbers of bulletin boards while online with one of the bulletin boards. For example, while online with the Comnet-80 Bulletin Board (817/767-5847), you can get numbers of many bulletin boards in the United States and Canada.

Although accessing a public bulletin board service is similar to the steps shown in Chapter 2, there are some differences:

- You do not need to make any prior arrangements with the service. Most bulletin boards are free and can be accessed by anyone that dials the number.
- You do not need to use a network to access the bulletin board. In most cases, you can simply call the bulletin board and immediately start using it.
- You may need to "experiment" with TELCOM parameters. Since you usually will not have made any prior arrangements with the service, you will have to try out different parameters.

Connecting to a Public Bulletin Board

Refer to Chapter 2 if you need help with these steps:

1. Set TELCOM's parameters—Try either of these most commonly-used settings:

   M7E1ENN, O
   M8N1ENN, O

2. Connect the Tandy 200 to the telephone.

3. Dial the number of the bulletin board.

4. Enter the TELCOM terminal mode.

5. Wait for the terminal function-key display.

At this point you should be connected to the bulletin board and can follow its prompts. Here again you need to experiment. Each bulletin board service uses its own prompts and menus.

If meaningless characters appear on your screen, you need to try a different TELCOM parameter setting. See Chapter 8 if neither of the most commonly-used settings work.

If no characters appear on your display, you may need to type some characters to get the bulletin board's attention. Try pressing [CTRL] [C]. (Hold down [CTRL] while pressing [C].)

Disconnecting from a Bulletin Board

Many bulletin boards will prompt you to logoff before disconnecting. If so, follow the bulletin board's prompt.

To disconnect, press [F8] and answer TELCOM's disconnect prompt with **Y** [ENTER].

Chapter 6/
Automatically Dialing and Logging On

Because dialing and logging on to computer services can become tedious, the Tandy 200 built-in modem comes with a feature that lets you do this with a single keystroke. To use this autodial/autologon feature you must have a Tandy 200 modem cable.

How to Use an Autodial/Autologon Sequence

In the *Tandy 200 Owner's Manual*, you learned that you can store a telephone number in ADRS.DO and, by enclosing the number in quotes, autodial the number from TELCOM.

Along with this telephone number, you can store an entire logon sequence. For example the following is the logon sequence for connecting and logging on to CompuServe using the CompuServe network:

```
CISCSN:5551212<=^C?UUSERLYN^M?PSECRET^M>:
```

To use this sequence, enter the above line in the ADRS.DO file as one continuous line, substituting your own telephone number, user ID, and password. Then, whenever you want to connect to CompuServe, all you need to do is:

1. Set TELCOM's parameters: Do this as shown in Chapter 2.

2. Connect to the telephone: Do this as shown in Chapter 2.

3. Find the autodial/autologon sequence: Press TELCOM's find key (F1); then enter any characters in the record containing the sequence. In this example, type F1 **CISCSN** ENTER.

4. Call the autodial/autologon sequence: Press TELCOM's call key F2.

When TELCOM "calls" the autodial/autologon sequence, it automatically dials the number, establishes a terminal connection, and logs on—You never even need to pick up the telephone.

Commonly-Used Autodial/Autologon Sequences

The following are autodial/autologon sequences for CompuServe, Dow Jones, and The Source. To use one of these sequences, enter it into the ADRS.DO file as 1 continuous line. (Do not press ENTER until you have entered the entire sequence.) Substitute your own telephone number, user ID (if required), and password. Then automatically dial and logon to the service, as shown above.

When storing your telephone number, be sure to store all required digits. For example, a preliminary "1" or "9" may be required.

Also, if your ID or password includes any of the following special characters, you need to precede that character with the ! symbol:

= ^ ! ? < >

For example, if your password is MAKE=EVEN, you need to precede the = character with the ! symbol:

MAKE!=EVEN

***Important Note:** If you type any of the characters in a autodial/autolog sequence incorrectly, the sequence will not work. For example, if the sequence requires a lower-case "t" and you type an upper-case "T", the sequence will not work.*

CompuServe Autodial/Autologon

Using the CompuServe Network:

```
CISCOMPUSERVE:5551212<=^C?UUSERLYN^M?PSECRET^M>:
```

Using the Tymnet Network:

```
CISTYMNET:5551212<==A?p^PCPS01^M?UUSER_YN^M?PSECRET^M>:
```

Using the Telenet Network:

```
CISTELENET:5551212<=^M=^M?TD1^M?@C 2022C2^M?UUSERLYN^M?PSECRET^M>:
```

Using the Datapac Network through CompuServe:

```
CISDATAPAC/COMPUSERVE:5551212<==.=^M====29400138^M?HCIS^M?UUSERLYN^M?PSECRET^M>:
```

Using the Datapac Network through Tymnet:

```
CISDATAPAC/TYMNET:5551212<==.=^M====P 1 3106,CPS^M?HCIS^M?UUSERLYN^M?PSECRET^M>:
```

Using the Datapac Network through Telenet:

```
CISDATAPAC/TELENET:5551212<==.=^M====1311D614C227^M?HCIS^M?UUSERLYN^M?PSECRET^M>:
```

Dow Jones Autodial/Autologon

Using the Tymnet Network:

```
DOWTYMNET:5551212<==A?pDOW1;;?WDJNS^M?PSECRET^M>:
```

Using the Telenet Network:

```
DOWTELENET:5551212<=^M=^M?TD1^M?@C 60942^M?WDJNS^M?PSECRET^M>:
```

Using the Datapac Network:

```
DOWDATAPAC:5551212<==...^M====13106,DOW1;;^M?WDJNS^M?PSECRET^M>:
```

The Source Autodial/Autologon

Using the Telenet Network:

```
SOURCETELENET:5551212<=^M=^M?TD1^M?@C 30147^M?>^M?IID USERLYN SECRET^M>:
```

Using the Uninet Network:

```
SOURCE UNINET:5551212<==^M.^M?sS15^M?>^M?IID USERLYN SECRET^M>:
```

How to Create an Autodial/Autologon Sequence

To create an autodial/autologon sequence, use this format:

:*number*<*logon*>:

number tells TELCOM what telephone number to autodial.

< >tells TELCOM to enter the terminal mode. By omitting the enclosed *logon* sequence, you can get TELCOM to simply enter the terminal mode without logging on. (Example: :8702461< >:)

logon tells TELCOM how to logon a computer service. It can consist of characters, which TELCOM will "send" to the service, and special symbols, which are listed below:

SYMBOL	TELLS TELCOM TO...
=	Pause for 2 seconds
^	Send the next character as a (CTRL) character.
?	Wait to receive the next character.
!	Send the next symbol as a character.

(The ! symbol is for when you need to send a special symbol as a character.)

Example of an autodial/autologon sequence:

```
CISCSN:870-2461<=^C?U76338,44^M?PSECRET^M>:
```

The above autodial/autologon tells TELCOM to autodial the number 870-2461, enter the terminal mode, and logon to CompuServe as follows:

=	Pause for 2 seconds (This ensures that CompuServe will receive your first character.)
^C	Send (CTRL) (C)
?U	Wait to receive a line that contains a "U" character (the "U" in CompuServe's "User ID" prompt).
76338,44	Send 76338,44 (in this example, your user ID).
^M	Send (ENTER) ((CTRL) (M) sends the same character code as (ENTER).)
?P	Wait to receive a line with "P" (the "P" in CompuServe's "Password:" prompt).
SECRET	Send SECRET (in this example, your password)
^M	Send (ENTER)

At the end of the sequence, you can add additional requests. For example, if you want TELCOM to automatically request a quote from Tandy Corportation common stock after logging on to Dow Jones, you could add the following request to the end of the Dow Jones logon sequence:

```
?Q,TAN^M
```

The complete Dow Jones logon sequence (using the Tymnet network) would then look like this:

```
DOWTYMNET:5551212<==A?pDOW1;;?WDJNS^M?
PSECRET^M?Q,TAN^M>:
```

Section II/
Communicating with Private Computers

This section shows how to communicate with private computers. Chapters 7 and 8 give background information on which computers can communicate with TELCOM and how to adjust TELCOM's communication parameters.

Chapters 9, 10, and 11 show how to connect to the other computer using the 3 kinds of connections that TELCOM supports. Chapter 12 shows how to communicate with the other computer and exchange files. Chapter 13 provides two sample sessions that you may find helpful in applying to your own communication environment.

Chapter 7/ Which Computers Can Communicate with TELCOM

This chapter will help you determine whether another computer can communicate with TELCOM. It also explains some important communication concepts so that you will be better equipped to handle any special problems that may occur.

How TELCOM Communicates with Other Computers

TELCOM communicates with other computers by acting like a "terminal." As a terminal, TELCOM sends and receives information with another computer. You can use TELCOM to:

- Access the programs and data of a "host" computer such as a timesharing or home-office computer. (A host computer is a computer that can process commands that a terminal sends to it.)
- Exchange text files with another computer running a terminal program—such as a office or a home computer—or with a host computer.

TELCOM is able to communicate with many unlike computers by using certain communication conventions. These conventions govern how computers connect to each other, how they transmit and code data, and how they transfer files.

This chapter describes the conventions that TELCOM uses, which are widely-recognized by small computers and public-access computers. Any computer that is able to follow these conventions can communicate with TELCOM.

Connection

TELCOM lets you connect to another computer in 3 ways:

- Over the telephone, using the built-in modem.
- Over the telephone, using an optionally-purchased external modem
- Directly, using an RS-232 cable.

For the connection to work, both computers must be able to transmit data at the same speed. This speed is measured in "bits per second" (bps) or "baud". In just about all cases, bps and baud are the same—A 300-bps modem is also a 300-baud modem.

- When using the built-in modem connection, TELCOM can transmit data at 1 rate only—300-baud. This is a common rate for telephone transmission.
- When using an external modem connection, TELCOM can transmit data at any rate the external modem is equipped to handle.
- When using the direct cable connection, TELCOM can transmit data at rates ranging from 75- to 19,200-baud.

Modem Connection. A modem lets you transmit data over the telephone by converting data to modulated signals. When the modem at the other end of the line receives the signals, it "demodulates" them back to data. For this to work, both modems must understand each other's signals.

The built-in modem uses standard signals, called Bell-103 signals. These signals transmit data over the a normal telephone line in 2 directions at the same time: The top part of the line carries the signals of the modem in the "originate" mode; the bottom part carries the signals of the modem in the "answer" mode.

Almost all 300-baud modems in America can use Bell-103 signals. In addition, many standard 1200-baud modems, such as Bell-212a modems, can transmit data at 300-baud using Bell-103 signals.

You may, however, want to connect to a computer that requires a different kind of of line (such as a leased line) or a faster baud rate (such as 1200-baud).

If this is the case, you need to purchase an external modem to use with TELCOM. You can use any external modem that conforms to these 2 standards: (1) It must have an RS-232 interface and (2) It must be designed for use with asynchronous, rather than synchronous, transmission.

Some external modems come with intelligent features, such as autodial, autologon, and auto-answer features. TELCOM will not know how to use the intelligent features of an external modem.

RS-232 Connection. The RS-232-C interface connector was designed by the Electronic Industry Association (EIA) as a standard way to connect communications equipment (such as modems) to terminal equipment (such as computers).

Most external modems in America have the RS-232 interface and many international modems have a compatible interface called the V.24 interface. You can connect any modem that has either of these interfaces to the Tandy 200.

In addition to being a modem standard, the RS-232 has also become a standard way of directly connecting computers. Most American computers have the RS-232 connection—or at least have an option to add on this interface—and many international computers have the compatible V.24 interface. You can directly connect to computers with either of these interfaces.

The actual RS-232/V.24 interface standard consists of 25 signals, but like most computers and modems, the Tandy 200 uses only 7 of these signals:

Signal 2	Transmit data (T X D)
Signal 3	Receive data (R X D)
Signal 4	Request to send (RTS)
Signal 5	Clear to send (CTS)
Signal 6	Data set ready (DSR)
Signal 7	Common ground (GND)
Signal 20	Data terminal ready (DTR)

If the computer or modem you want to connect to the Tandy 200 uses more signals or less signals, this could cause transmission to hangup. You can usually correct this problem by having some wires on the RS-232 cable adjusted.

Echo

TELCOM follows a convention in which you can control whether it displays or does not display on the screen the characters you type or send from a file.

- If you want TELCOM to display your characters, you can turn TELCOM's echo on. (TELCOM calls this its "half-duplex" mode.)
- If you do not want TELCOM to display your characters, you can turn TELCOM's echo off. (TELCOM calls this its "full-duplex" mode.)

The reason for turning TELCOM's echo off is because of the way many host computers such as CompuServe use 2-way transmission: To let you know whether they received your characters correctly, these computers send you back an "echo" of each of your characters.

When communicating with a host computer such as CompuServe that echos your characters, you will want to turn TELCOM's echo off. Otherwise you will see each of your characters displayed twice—once by TELCOM and once by the host computer.

When communicating with a computer that does not echo your characters, you will want to turn TELCOM's echo on. Otherwise, you will not see any of your characters displayed.

> ***Note:*** *Unlike their names imply, TELCOM's full- and half-duplex modes control only whether TELCOM's echo is on or off. These modes have nothing to do with whether TELCOM uses 2- or 1-way telephone signals. Telephone signals are produced by your modem; the built-in modem always produces 2-way signals, regardless of what "duplex" mode TELCOM is using.*

Transmission

TELCOM transmits data as a series of "bits" (0's and 1's) using an "asynchronous" transmission—the standard transmission for micro- and minicomputers. With this transmission, computers use a certain word length, parity, and stop bit setting to tell where each character begins and ends, and to check for certain transmission errors.

You do not need to understand the meaning of these asynchronous parameters as long as yours match the other computer's. If interested, though, here is a brief explanation:

- Word Length—tells how many bits are in each character.
- Parity—tells whether to include 1 extra bit with each character to check for some transmission errors.
- Stop Bit—tells how many bits are at the end of each character.

Large mainframe computers normally use synchronous, rather than an asynchronous transmission. With synchronous transmission, computers transmit data in carefully-timed batches using a protocol such as BSC or SDLC.

The only way you can get the Tandy 200 to communicate using synchronous transmission is (1) by purchasing a device called a protocol converter or (2) by using service for protocol conversion such as the services offered by Tymnet and Telenet.

Codes

Computers transmit data as codes. When computers disagree on the meaning of codes, strange characters will appear on your screen. TELCOM uses widely-recognized standards for 2 kinds of codes—ASCII codes and sequence codes.

ASCII Codes. ASCII codes were developed by the American National Standards Institute (ANSI) as a standard way to represent text (such as letters and numbers) and common "control" functions (such as a carriage return or a tab). ASCII codes consist of 128 codes (Codes 0-127).

Almost all computers in North America, except for a few mainframes, can use ASCII codes. In addition, ASCII codes are only a slight national variation from an international standard for text codes, called International Alphabet 5.

Even though ASCII codes are a standard, computers may differ in how they interpret a few of the control codes—such as the carriage return, stop, and start codes. For this reason, TELCOM gives you a way of adjusting these codes.

In addition, a few computers may assign nonstandard meanings to some of the control codes; if these nonstandard control codes are used with TELCOM, they will cause unpredictable results. For this reason, TELCOM gives you a way of ignoring all ASCII control codes except for the carriage return and line feed.

Sequence Codes. In addition to ASCII codes, host computers sometimes use "sequence codes" to control a terminal in special ways. For example, a host computer's accounting program may send you an escape code (Code 27) followed by an "A" (Code 65) to center a line on your display.

Standards for sequence codes differ among terminals. TELCOM recognizes the sequence codes of the "VT-52 terminal." Other kinds of sequence codes will cause unpredictable results—usually strange characters on your display.

Other Kinds of Codes. In addition to ASCII codes and sequence codes, computers sometimes use an additional 128 codes (Codes 128-255) for special characters or control functions. TELCOM uses Codes 128-255 for graphic, foreign, and special characters that are unique to the Tandy 200 and Model 100 computers—If another computer uses Codes 128-255 with TELCOM, these codes will cause strange characters to appear on your display.

File Transfer

TELCOM, like many other computers, can transfer text files (also referred to as "ASCII files," and "data files"). Some computers have options for transferring other kinds of files, such as "binary" files. TELCOM *cannot* transfer binary files—It can transfer text files only.

TELCOM lets you transfer text files in the following way: You can send any text file to another computer. TELCOM sends the text to the other computer just as if you were typing it on the keyboard. By the same token, you can store any text file being transmitted from the other computer in a Tandy 200 text file.

Some computers have options for using special error-checking methods when transferring files:

- **TELCOM *can* follow the "stop/start protocol" (also called "XON/XOFF handshaking protocol").** This protocol lets a computer tell TELCOM to stop and restart transmission—a function required by some computers when transferring files. To use this parameter, TELCOM must have its start/stop parameter enabled, as described in the next chapter.
- **TELCOM *cannot* follow any special error-checking protocols, such as XMODEM.** These protocols use special methods to check for errors and, if necessary, retransmit data: They can be used only when both computers follow the protocol.

Chapter 8/
Setting Communication Parameters

This chapter gives background information on the communication parameters you can use when communicating with another computer.

Checking the Settings

Before communicating with another computer, you need to check TELCOM's communication parameters (Figure 8.1) and make sure that they are set correctly.

You can check these parameters when you first enter TELCOM and anytime before entering TELCOM's terminal mode by pressing (F3) (ENTER).

To change the parameter settings:

1. Press (F3) and you see the "Stat" prompt.

2. Enter the new parameter settings, for example **M8N1ENN,O** (ENTER). (You do not need to include the last parameter—the dial type—unless you want to change it.)

3. Check the newly-set parameters by pressing (F3) (ENTER).

What the Settings Mean

Some parameters settings—such as the connector—are extremely important. If set incorrectly, no transmission will take place. Other settings—such as the control code filter—are only for unique problems. The following describes TELCOM's parameter settings in order of importance.

Connector (M7E1ENN,O,10 pps). Make sure this setting is correct. Otherwise, no transmission will take place.

Connector:
M—PHONE (built-in modem)
1—RS-232, 75 baud
2—RS-232, 110 baud
3—RS-232, 300 baud
4—RS-232, 600 baud
5—RS-232, 1200 baud
6—RS-232, 2400 baud
7—RS-232, 4800 baud
8—RS-232, 9600 baud
9—RS-232, 19200 baud

This parameter tells TELCOM which connector to use: the built-in modem's PHONE connector or the RS-232 connector. It also tells TELCOM, if using the RS-232, what baud rate to use. (The built-in modem always uses 300 baud.)

(Remember that if you have an optional external modem, it connects to the RS-232—not the PHONE.)

Originate/Answer (M7E1ENN,O,10 pps). If using the built-in modem, make sure this setting is opposite from the other computer. Otherwise, no transmission will take place.

Originate/ Answer: O—originate
A—answer

The RS-232 ignores the originate/ answer setting, so if using the RS-232, you do not need to be concerned with this parameter.

Word Length, Parity, Stop Bit (M7E1ENN,O,10 pps). Make sure these settings agree with the other computer. Otherwise, many of the characters transmitted will be meaningless.

Word length: 6—6 bits
7—7 bits
8—8 bits

Parity: I—ignore parity
O—odd parity
E—even parity
N—no parity

Stop bit: 1—1 stop bit
2—2 stop bits

It really does not matter what word length, parity, and stop bit values you use, as long as they agree with the other computer. (Exception: Do not use a word length of 6 unless you have a specific reason to do this.) If in doubt of what parameters the other computer is using, try the 2 most common settings: 7E1 and 8N1.

Stop/Start Protocol (M7E1ENN,O,10 pps) (Also called XON/XOFF Handshaking Protocol)
Reset this only if you need to change start/stop control:

Start: E—Enable Start/ Stop Characters
Stop: D—Disable Start/ Stop Characters

If the other computer continually stops transmission for no reason, set this parameter to "disable." If the other computer requires you to use the start/stop protocol, set this parameter to "enable."

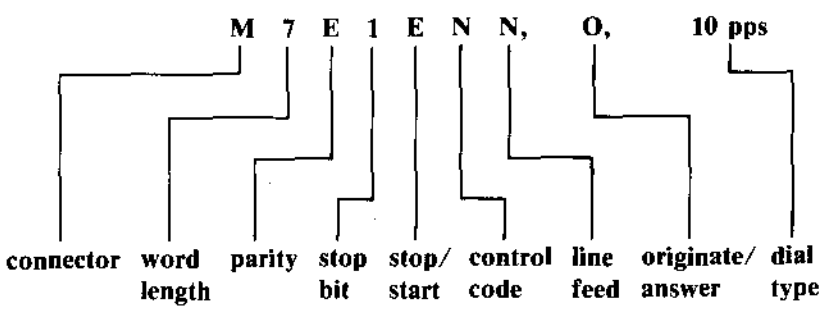

Figure 8.1. TELCOM's communication parameters.

By enabling the start/stop protocol, you can use the start/stop characters while communicating with any computer that also recognizes this protocol:

To stop transmission:	Press (CTRL) (S) (the stop character)
To restart transmission:	Press (CTRL) (Q) (the start character)

When communicating with a computer that does not recognize this protocol, we suggest you disable the stop/start characters; otherwise, the other computer may unintentionally send you stop characters and lock up transmission.

Control Character Filter (M7E1ENN,O,10 pps). Reset this only if you are having problems with control characters.

Control Code Filter:	N—Normal I—Ignore all control characters except for carriage return and line feed.

If you are receiving strange characters from the other computer, set this parameter to "ignore." If you are not receiving the control characters you need, such as a tab or a backspace, it may be because you have this parameter set to "ignore"—Set it back to "normal."

By setting this parameter to "ignore", TELCOM will ignore all 32 ASCII control codes (Codes 0-31) except for the carriage return, line feed, XON, XOFF and tab codes. It will not, however, ignore other strange codes a computer may send you, such as sequence codes (the codes following, for example, the escape code) or ASCII extension codes (Codes 128-255).

Line Feed (M7E1ENN,O,10 pps). Reset this only if you are having problems with line spacing.

Line Feed:	N—Carriage Return I—Carriage Return/Line Feed

If the lines you receive are displaying on top of each other, set this parameter to "I." If lines you receive are displaying double-spaced, set this parameter back to "N."

Computers differ in the codes they use at the end of lines. Some use only the carriage return code at the end of lines; others use both the carriage return and line feed codes. Set to "I", TELCOM adds a line feed code to the end of each line that it receives.

The line feed parameter affects only the lines that TELCOM receives. TELCOM does not have a way of adjusting the lines that it sends.

Dial Type (M7E1ENN,O,10 pps). Reset this only if you want to change TELCOM's autodialing method.

Dial Type:	10 pps—slow pulse dialing 20 pps—fast pulse dialing T—tone dialing

Chapter 9/ Establishing a Connection—Using the Built-in Modem

This chapter shows how to establish a terminal connection with another computer using the Tandy 200 built-in modem. After establishing a connection, go to Chapter 12 to learn how to use TELCOM in its terminal mode.

Requirements

As stated in Chapter 7, the Tandy 200 built-in modem lets you connect over a normal telephone line to any other computer that has a compatible modem.

To use the built-in modem, you need to purchase one of the following so that you can connect the Tandy 200 PHONE connector (on the rear) to a telephone:

- The Tandy 200 modem cable (Cat. No. 26-1410)—This is the most reliable since it connects the built-in modem directly to the telephone wire.

or

- An acoustic coupler (Cat. No. 26-3805)—Use this when you cannot directly connect to a telephone (for example, when using a pay phone).

Establishing a Connection

Before starting, find out the following information about the other computer:

- Which mode it will use: originate or answer. (Host computers and information networks normally use "answer." Computers running terminal programs normally use "originate.")
- Which word length, parity, and stop bit settings it will use.

1. Set your communication parameters.

Enter TELCOM and make sure the important communication parameters are set correctly:

- The **connector** should be **M**.
- The **word length**, **parity**, and **stop bit** should **match** the other computer.
- The **originate/answer mode** should be **opposite** from the other computer.

Example:

*M7E1*ENN, *A*, 10 pps

This sets the connector to "M", the word length to "7", the parity to "even", the stop bit to "1", and the originate/answer mode to "answer".

2. Connect the built-in modem to the telephone.

Tandy 200 Modem Cable: Connect the cable in either of the ways shown below and set the ACP/DIR switch (on the left of the Tandy 200) to DIR:

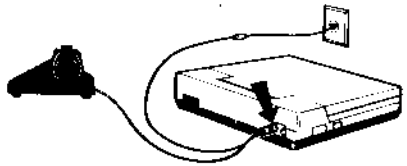

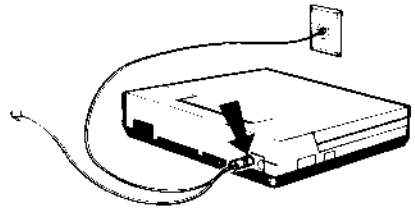

Acoustic Coupler: Connect the coupler to the Tandy 200 PHONE jack (on the rear of the Tandy 200) and set the ACP/DIR switch (on the left) to ACP.

The remaining steps depend on whether you are set to "originate" or "answer." Use these steps when you are set to "originate"

3. Call the other computer.

By convention, you as the originator place the call, although TELCOM does not really care who does this.

4. Wait for a high-pitched tone.

When ready to communicate, the person at the other computer needs to do whatever procedures are necessary to enter the terminal mode—Once the other computer is in this mode, you will hear a high-pitched tone.

Note: *Some computers will automatically answer—With these computers, you will immediately hear a high-pitched tone.*

5. Press [F4] to enter the terminal mode.

If you are using an acoustic coupler, place the receiver in the coupler.

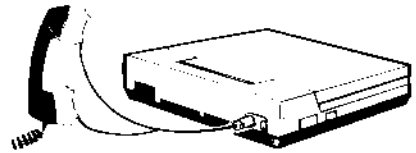

6. Wait for the terminal function-key display.

A few seconds after you enter the terminal mode, you should see the terminal function key display:

Prev Down Up Full BRK Bye

This lets you know you have established a terminal connection with the other computer. You can test this by typing. Each character you type, TELCOM sends to the other computer; each character you receive from the other computer, TELCOM displays on your screen.

If you are connected to a host computer, you may need to send a special character so that the host will know you are online. For example, some hosts require that you send [CTRL] [C]—To do this press and hold down [CTRL]; then press [C] at the same time.

Use these steps when you are set to "answer":

3. Have the other computer call you.

By convention, the other computer as the originator places the call, although TELCOM does not really care who does this.

4. Press [F4] to enter the terminal mode.

Since you are in the answer mode, pressing [F4] causes you to produce a high-pitched tone; this is a signal to the other computer that you have entered the terminal mode.

If you have an acoustic coupler, place the receiver in the coupler:

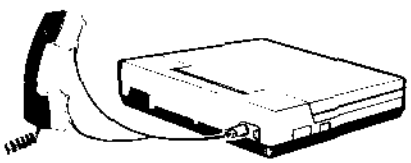

5. Wait for the other computer to enter the terminal mode.

The person at the other computer should do whatever procedures are necessary to enter the terminal mode.

> ***Note:*** *Some computers will dial your number, wait for your high-pitched tone, and then enter the terminal mode—all automatically.*

6. Wait for the function-key display.

A few seconds after the other computer enters the terminal mode, you should see the terminal function-key display:

Prev Down Up Full BRK Bye

This lets you know you have established a terminal connection with the other computer. You can test this by typing. Each character you type, TELCOM sends to the other computer; each character you receive from the other computer, TELCOM displays on your screen.

If You Cannot Establish a Connection

If you cannot transmit any characters (even meaningless characters) with the other computer, go through all the steps again, checking each of the following:

- *The connectors:* If using the modem cable, make sure the beige wire goes to the wall line, the grey wire to the phone line, and the plug to the Tandy 200 PHONE jack. If using the acoustic coupler, make sure it is plugged into the Tandy 200 PHONE jack and that you insert the speaker and the receiver in the correct coupler "cups."
- *The ACP/DIR setting:* This should be ACP for the acoustic coupler and DIR for the direct modem cable.
- *The other computer's transmission signals:* These should be 300-baud, Bell-103 signals.
- *The connection parameter:* This should be "M".
- *The originate/answer parameter:* This should be opposite from the other computer.
- *The sequence you use to establish the connection:* The steps are different depending on whether you are set to originate or answer.

Chapter 10/ Establishing a Connection—Using a Direct Cable

This chapter shows how to establish a connection with another computer using a direct cable. After establishing a connection, go to Chapter 12 to learn how to use TELCOM in its terminal mode.

Requirements

As stated in Chapter 7, you can use a direct cable to connect to any other computer that has a compatible RS-232 V.24 interface. You also need to place the 2 computers 50 feet or closer to each other.

To connect the two computers, you need to purchase the following:

- A standard 25-pin RS-232 cable (such as Cat. No. 26-1408).
- A standard RS-232 null modem adapter (such as Cat. No. 26-1496).

Depending on your other computer, you may also need to purchase:

- An RS-232 male/female adapter
- An RS-232 cable extender

Connecting the Cable

1. Connect one end of the RS-232 cable to the Tandy 200 and the other end of the RS-232 cable to the null modem adapter.

2. Try connecting the null modem adapter to the other computer's RS-232 connector. (If the other computer's RS-232 has pins rather than holes, you need to use the male/female adapter.)

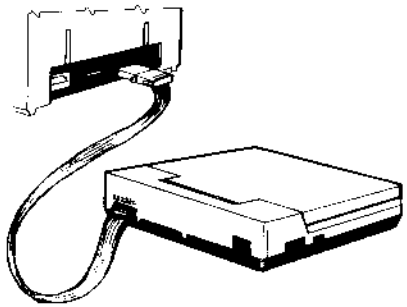

3. If this connection is not secure, use the RS-232 cable extender:

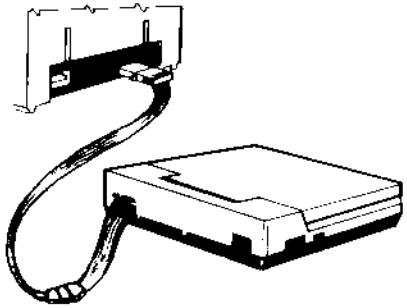

Establishing a Connection

Before starting, Find out this information about the other computer:

- Which baud rate it can use.
- Which word length, parity, and stop bit it can use.

Although TELCOM can use baud rates up to 19200, we suggest that you start by using a relatively low baud rate such as 1200 baud. Then, after seeing that the connection works, try higher baud rates. (With some computers, the higher baud rates will not work.)

1. Set TELCOM's important communication parameters:

- The **connector** should be set to an RS-232 baud rate—This baud rate should **match the other computer.**
- The **word length**, **parity**, and **stop bit** should **match** the other computer.

Example:

57E1ENN, A, 10 pps

This sets the connector to "5" (an RS-232 baud rate of 1200), the word length to "7", the parity to "even", and the stop bit to "1".

2. With both computers, enter the terminal mode.

To enter the Tandy 200's terminal mode, press [F4]—This causes the terminal-function key display to appear as shown below; however, you will not establish a connection until the other computer also enters its terminal mode.

Prev Down Up Full BRK Bye

(It does not matter which computer enters the terminal mode first.)

3. Test the terminal connection.

After both computers enter the terminal mode, test that you have established a connection by typing characters. Each character you type should be sent to the other computer; each character the other computer sends should appear on your display. If you have established a connection, go to Chapter 12.

If You Cannot Establish a Terminal Connection

If you cannot transmit any characters (even meaningless characters), you may need to have the wires on the RS-232 cable adjusted. Before you decide you need to do this, though, make sure you have done all the steps correctly.

Press [F8] to exit the terminal mode and respond to TELCOM's "Disconnect" prompt with [Y] [ENTER]. Then try the steps again, checking each of the following:

- *The connectors:* The connection must be correct and all connectors securely fastened.
- *The RS-232 baud rate:* This should match the other computer.
- *The terminal mode:* Both computers must must enter the terminal mode.

Adjusting the RS-232

The RS-232 comes in 2 complementary versions—DTE and DCE. These 2 versions are designed to be connected to each other. The DTE version, for example, uses Signal 2 to *transmit* data; the DCE uses Signal 2 to *receive* data.

The Tandy 200, like most computers and terminals, uses the DTE version; the complementary DCE version is used by most modems. In other words, the Tandy 200 is actually designed to be connected to a modem—This is why, to connect the Tandy 200 to most other computers, you need a null-modem adapter.

The null-modem adapter crosses the wires in such a way that both computers' DTE's "think" they are connected to DCE's, as shown in Figure 10.1. This works fine when connecting to most other computers. There are, however, some exceptions:

Some computers use a DCE, rather than a DTE version of the RS-232: If this is the case, you should not use the null-modem adapter.

Some computers require different signals from the signals that the Tandy 200 requires: If this is the case, you need to have a technician cross the wires in the RS-232 cable in such a way that satisfies the signal requirements of both computers.

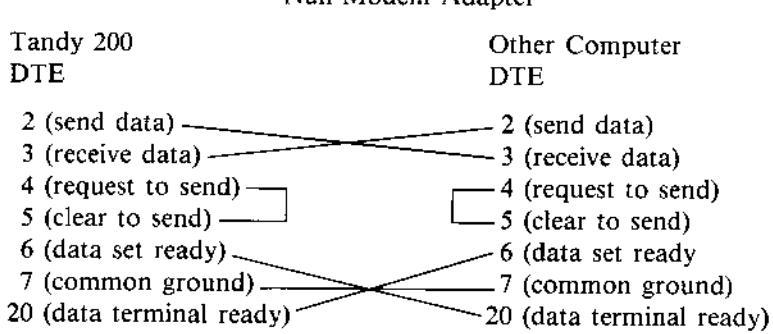

Figure 10.1. Null-Modem Adapter.

Chapter 11/ Establishing a Connection—Using an External Modem

This chapter shows how to establish a connection with another computer using an external modem. After establishing a connection, go to Chapter 12 to learn how to use TELCOM in the terminal mode.

Requirements

You can purchase any external modem to use with TELCOM that meets the requirements listed in Chapter 7. To connect the modem to the Tandy 200, you will need to purchase an RS-232 cable.

Establishing a Connection

Before starting, find out the following information about the other computer:

- Which mode it will use: originate or answer. (This question is only applicable for external modems that use the originate/answer modes.)
- Which baud rate it will use.
- Which word length, parity, and stop bit settings it will use.

1. Connect the external modem. Refer to the external modem's manual on how to connect the modem. (You will need to connect the modem to the Tandy 200's RS-232 connector, which is on the rear of the Tandy 200.)

2. Set TELCOM's communication parameters.

Enter TELCOM and make sure the important communication parameters are set correctly.

- The connector should be set to an RS-232 baud rate that matches both (1) the external modem and (2) the other computer.
- The word length, parity, and stop bit parameters should match the other computer.

Example:

*57E1*ENN, O, 10 pps

This sets the connector to "5" (an RS-232 baud rate of 1200), the word length to "7", the parity to "even", and the stop bit to "1".

3. Set the external modem as required.

Refer to the external modem's manual on how to make any required settings, such as the originate/answer setting. (TELCOM's originate/answer parameter applies only to the built-in modem—*not* to an external modem.)

4. Connect to the other computer.

Refer to the external modem's manual on how to connect to the other computer over the telephone and which sequence the 2 computers should use to enter the terminal mode.

To enter TELCOM's terminal mode, press [F4]. This causes TELCOM's terminal-function key to appear as shown below; however, you will not have established a connection with the other computer until both computers enter the terminal mode.

Prev Down Up Full BRK Bye

5. Test the terminal connection.

After both computers enter the terminal mode, test that you have established a connection by typing characters. Each character you type should be sent to the other computer; each character the other computer sends should appear on your display.

If You Cannot Establish a Connection

If you cannot transmit any characters (even meaningless characters) with the other computer, go through all the steps again, checking each of the following.

- *TELCOM's connection parameter:* This should be an RS-232 baud rate that matches the external modem.
- *The other computer's baud rate and telephone signals:* This should be the same as the baud rate and signals used by TELCOM and the external modem.
- *The external modem's connection:* Refer to the modem's manual.
- *The external modem's settings (such as originate/answer):* Refer to the modem's manual.
- *The sequence you use to establish a connection:* Refer to the modem's manual.

If you still cannot transmit any characters, it may be because of an incompatible RS-232 connection.

Adjusting the RS-232 Cable

As stated in Chapter 7, the Tandy 200 uses 7 of the RS-232's 25 signals. If the external modem uses less or more signals, this could cause transmission to hang-up. You will need to have a technician cross the wires of the RS-232 cable in such a way that satisfies the requirements of both TELCOM and the external modem.

Chapter 12/
Communicating and Exchanging Files

This chapter describes the TELCOM functions that you can use while in its terminal mode. It also gives instructions on how to transfer files.

Communicating with Another Computer

After establishing a connection with another computer, you are in TELCOM's terminal mode. Whenever you type a character, TELCOM sends that character to the other computer as a code. Whenever the other computer sends you a code, TELCOM displays that code on your screen as a character.

For example, if you type the letter "A", TELCOM sends Code 65 to the other computer. If the other computer.sends you Code 65, TELCOM displays the letter "A" on your screen. Reference B lists the codes that TELCOM uses for each character.

Using Control Characters

While in TELCOM's terminal mode, you may find it useful to use the following control characters:

- (CTRL)(H) to backspace
- (CTRL)(S) to temporarily stop transmission
- (CTRL)(Q) to restart transmission

To use a control character, press (CTRL) and while holding down (CTRL), press the next character. For example, to backspace, press (CTRL) and while holding down (CTRL), press (H).

As discussed in Chapter 7, computers sometimes disagree on the meaning of the codes for control characters. For example, the other computer may not agree that the code for (CTRL)(H) means that it should backspace. If this is the case, you cannot use (CTRL)(H) to backspace while communicating with that computer.

Using TELCOM's Function Keys

While in TELCOM's terminal mode, you may find it useful to use the following function keys.

Prev (F1). Although you can see only 16 lines on your display, TELCOM keeps 32-lines in its memory at all times. To see the previous screen, press (F1). To return to the current screen, press (F1) again.

Full/Half (F4). If you cannot see the characters you type, press (F4) to go to turn on the local echo ("half duplex"). If you are seeing double of the characters you type, press (F4) to turn the echo off ("full duplex").

Print (F5). If you have a printer connected, press (F5) to turn the print function on. All information being transmitted will be printed on your printer. To turn off this function, press (F5) again.

Up (F3) and Down (F2). These two keys let you exchange files with the other computer. Exchanging files is described below.

BRK(F7). Some host computers require that you send them a special 250 millisecond break signal for functions such as breaking out of a program. To send a special break signal, press (F7).

Bye (F8). This key lets you disconnect from the other computer and exit TELCOM's terminal mode.

Transferring Files

As stated in Chapter 7, TELCOM can send and receive text files only (files with the .DO extension). The latter part of this chapter shows how to convert a Multiplan or a BASIC file to the text file format.

Sending a Text File:

1. Other Computer: Prepare for receiving the file.

Select the option that lets the other computer receive a text file. ("Receive" might also be referred to as "capture" or "download." "Text file" might also be referred to as a "data file" or an "ASCII file.")

When selecting this option, please note that you cannot use any special transfer method with TELCOM other than the stop/start (also called XON/XOFF) method. (To use the stop/start method, you must have TELCOM's start/stop communication parameter set to "enable.")

2. Tandy 200: Send the file.

Press TELCOM's Upload key ((F3)) and TELCOM asks for a filename. Enter the name of any file that has the .DO extension. Example:

File to Upload:
SAMPLE.DO (ENTER)

TELCOM asks "Width:". You can press (ENTER) or you can enter a line width from 1-132 characters. For this example, press (ENTER).

By pressing (ENTER), TELCOM sends the file to the other computer in the same way the file is stored. This is the best way to send a file that will be loaded into another computer's word processing program.

By entering a line width, TELCOM formats the file by sending it to the other computer with carriage returns at the end of each line. You may want your file formatted attractively if you are sending it to an electronic mail service.

Receiving a Text File:

1. Tandy 200: Prepare for receiving the file.

Press TELCOM's Download key (F2) and TELCOM asks for a filename. Enter the name you want to use for storing the file. Example:

File to Download: **SAMPLE** (ENTER)

TELCOM highlights the word "Down" to let you know that this function is "on". Any information being transmitted will be stored in SAMPLE.DO.

2. Other Computer: Send the text file.

Select the option that lets the other computer send a text file. ("Send" might also be referred to as "upload." "Text file" might also be referred to as a "data file" or an "ASCII file.")

When selecting this option, please note that you cannot use any special transfer method with TELCOM other than the stop/start (also called XON/XOFF) method. (To use the stop/start method, you must have TELCOM's start/stop communication parameter set to "enable.")

3. Tandy 200: Turn the download function off.

After receiving the entire file, press (F2) again. This turns the download function off; the word "Down" is no longer highlighted.

Converting Multiplan Files for Transfer

You can transfer Multiplan files with another computer by converting the file to and from Multiplan's SYLK (symbolic link) format. All versions of Multiplan use the same SYLK format.

To send a Multiplan file:

1. From the Main Menu, enter the Multiplan file that you want to send. Then press (F7), for Transfer, (F3), for Save, and (F3), for SYLK.

2. Type **RAM:** followed by any filename. For example, type **RAM:COSTS** (ENTER). This causes Multiplan to save the Multiplan file as a SYLK file.

3. Return to the Main Menu. The SYLK file has a .DO extension indicating that it is in the format of a text file.

4. Enter TELCOM and send the SYLK file to the other computer as instructed above in "Sending a Text File."

5. When the other computer receives the SYLK file, it will need to load the file into its own version of Multiplan using the SYLK option of its Multiplan load command.

To receive a Multiplan file:

1. Have the other computer save the Multiplan file as a SYLK file. Then have the other computer send the SYLK file to you as instructed above in "Receiving a Text File." When you receive the SYLK file it will have a .DO extension.

2. From the Main Menu, enter MSPLAN and create a Multiplan file. For example, type **ACCOUNT** (ENTER). Then press (F7), for Transfer, (F2), for Load, and (F3), for SYLK.

3. Type **RAM:**, followed by the name of the SYLK text file. For example, type **RAM:COSTS.DO** (ENTER). This causes Multiplan to load the SYLK file into the Multiplan file that you have just created.

Converting BASIC Files for Transfer

You can transfer BASIC programs with another computer by converting them to text files using BASIC's "ASCII" option.

To send a BASIC program:

1. From the Main Menu, enter BASIC. Press (F2), for Load, and enter the name of the BASIC program you want to send. For example, type **HELLO** (ENTER).

2. Press (F3), for Save. Then enter a filename using the format: *filename*", A. For example, type **HELLO", A** (ENTER). This causes BASIC to save the BASIC program as an ASCII file.

3. Return to the Main Menu. The ASCII file has a .DO extension which indicates that it is in the text file format.

4. Enter TELCOM and send the ASCII file to the other computer as instructed above in "Sending a Text File."

5. When the other computer receives ASCII file, it will need to load the file into its own version of BASIC using the ASCII option of its BASIC load command.

To receive a BASIC program:

1. Have the other computer save the BASIC program as an ASCII file. Then have the other computer send the ASCII file to you. When you receive the ASCII file, it will have a .DO extension.

2. Enter BASIC. Then type the MERGE command in this format: MERGE "*filename*" (ENTER). Be sure to include the .DO extension. For example, type **MERGE "HELLO.DO"** (ENTER). This causes BASIC to load the ASCII file.

3. Press [F3], for Save, and enter a filename. For example, type **HELLO** [ENTER]. This causes BASIC to save the file as a BASIC program.

Chapter 13/ Sample Sessions

This chapter contains two sample sessions that demonstrate how TELCOM can communicate with another computer. You may find these sessions helpful in setting up your own communications session.

Accessing a Tandy 16/Xenix System

This sample session shows how the Tandy 200 can act as a remote terminal, connected over a normal telephone line, to a Xenix system. It assumes you know how to edit Xenix files. If you do not, refer to the manuals that came with the Xenix system.

1. Tandy 16/Xenix: Prepare for communications.

a. Connect a modem to Channel A or Channel B, which is on the rear of the Tandy 16.

b. Edit the Xenix file named etc/termcap by inserting the entry shown in *Figure 13.1*. This entry gives Xenix information about the codes that TELCOM uses and the screen size of the Tandy 200. It does not matter where in the file you insert this entry.

Note: *Although the etc/termcap file already may have a "vt52" entry, and TELCOM uses the same codes as the "vt52" terminal, we still recommend that you insert the "tn200" entry. This is because the "td200" gives Xenix additional information. It specifies the Tandy 200's screen size.*

c. Edit the Xenix file named etc/ttytype by changing 1 line. If the modem is connected to Channel A, change the "tty01" line. If the modem is connected to Channel B, change the "tty02" line. To change this line, replace the line's terminal name with "td200".

For example, assume the etc/ttytype file currently contains these lines:

```
trs16    console
vt100    tty01
add25    tty02
add25    tty03
add25    tty04
add25    tty05
add25    tty06
```

If the modem is connected to Channel A, you need to change the "tty01" line by replacing "vt100" with "td200":

```
trs16    console
td200    tty01
add25    tty02
add25    tty03
add25    tty04
add25    tty05
add25    tty06
```

```
r1|td200|Tandy 200:\
  :am:bs:xt:co#40:li#16:al=\EL:dl=\EM:cd=^L:ce=\EK:cl=\EE:cm=\EY%+ %+ :\
  :nd=^\:dn=^_:up=\EA:se=\Eq:so=\Ep:kl=^]:kr=^^:ku=^^:kd=^_:
```

Figure 13.1. Entry to Xenix etc/termcap file.

If the modem is connected to Channel B, you need to change the "tty02" line by replacing "adds25" with "td200":

```
trs16    console
vt100    tty01
td200    tty02
add25    tty03
add25    tty04
add25    tty05
add25    tty06
```

d. Edit the Xenix file named etc/ttys by changing 1 line. If the modem is connected to Channel A, change the "tty01" line. If the modem is connected to Channel B, change the "tty02" line. To change this line, replace the "9" with a "3".

For example, assume the etc/ttys file currently contains these lines:

```
1hs console
09tty01
09tty02
09tty03
09tty04
09tty05
09tty06
```

If the modem is connected to Channel A, you need to replace the "9" with a "3" in the "tty01" line:

```
1hs console
03tty01
09tty02
09tty03
09tty04
09tty05
09tty06
```

e. Enable the modem channel. If the modem is connected to Channel A, type **enable tty01** (ENTER). If the modem is connected to Channel B, type **enable tty02** (ENTER).

The Xenix system is now prepared to communicate over the telephone with a Tandy 200-type terminal.

2. Tandy 200/TELCOM: Establish a terminal connection.

a. Set communication parameters. Xenix uses the following parameters: 8-bit word length, no parity, 1 stop bit, and XON/XOFF enabled. To set TELCOM to match these parameters, enter TELCOM and type: (F3) M8N1ENN, O (ENTER).

b. Connect the Tandy 200 to the telephone. Do this as instructed in Chapter 9.

c. Dial the Xenix system.

d. Enter the terminal mode. When you hear the high-pitched tone, press (F4), for Term. You see Xenix's login message:

Please login:

You can now use Xenix from the Tandy 200 in the same way that any other user can use Xenix.

Please note that although you can use Xenix in the same way as any other Xenix user, you may

have some limitations on which Xenix application programs you can run. For example, the Xenix Scripsit program can only be run by certain types of terminals (that have many special codes and display features) and cannot be run by a Tandy 200-type terminal.

Transferring Files with a Tandy 1000/MSDOS system

This sample session shows how to directly connect the Tandy 200 to the Tandy 1000/MSDOS system and exchange files. In this session, the Tandy 1000/MSDOS system is using the DeskMate program, although it could actually use most any communication program that can transfer files.

1. Connect the two computers

Do so using the RS-232 and the null-modem adapter as shown in Chapter 10.

> **Note:** *The Tandy 1000, unlike the Tandy 200, does not come with an RS-232 board built-in. You need to purchase the RS-232 as an optional item.*

2. Prepare the Tandy 1000 for the transfer.

a. Load DeskMate

b. Enter the DeskMate Telecom program.

c. Set the DeskMate Telecom parameters to the following:

autodial	no
baud	1200
word	8 bits
parity	none
stop bits	1 bit
XON/XOFF	ON
ASCII Character Filter	OFF
Line Feed Filter	OFF
Echo (Half Duplex)	ON

d. Enter the terminal mode by pressing [F5].

3. Prepare the Tandy 200 for the transfer.

a. Enter the Tandy 200 TELCOM program.

b. Set the TELCOM parameters by typing [F3] **58N1ENN** [ENTER].

c. Enter the TELCOM terminal mode by pressing [F4].

4. Test terminal connection.

The Tandy 1000/MSDOS System and the Tandy 200 should now be connected as terminals. Each character that is typed on either computer should be sent to the other computer.

On the Tandy 200, you may want to press [F4], to switch to Half, so that you can see the characters you are typing.

5. Send a file.

Tandy 1000: Press [F3], for Receive. At the prompt, enter any filename, for example, type **SAMPLE** [ENTER].

Tandy 200: Press [F3], for Upload. At the prompt, enter the name of the file you want to send. For example, type **SAMPLE.DO** [ENTER].

On the Tandy 200, you will see the word "Up" highlighted as the file is being sent.

6. Receive a file.

Tandy 200: Press [F2], for Download. At the prompt, enter any filename, for example, **SAMPLE** [ENTER].

Tandy 1000: Press [F4], for Send. At the prompt, enter the filename that you want to send, for example, **SAMPLE** [ENTER].

On the Tandy 200, you will see the file as it is being sent. After receiving the entire file, press [F2] again to turn off the "download" function.

References

A. TELCOM Function Keys
B. TELCOM Codes
C. Help

Reference A/ TELCOM Function Keys

TELCOM has two modes: interactive and terminal. This reference gives a brief description of the function keys that you can use in each of these modes.

Interactive Mode Function Keys

When you first enter TELCOM, you are in its interactive mode and use the following special function keys:

Find *(F1)* To find and autodial a number stored in ADRS.DO. (The number must be enclosed in colons (:).)

Call *(F2)* To autodial the number that you type and enter.

Stat *(F3)* To enter or display TELCOM's parameters.

Term *(F4)* To enter the terminal mode.

Menu *(F8)* To return to the Tandy 200 Main Menu.

Terminal Mode Function Keys

From the interactive mode, you can enter TELCOM's terminal mode by pressing F4. In the terminal mode, each character you type is "sent" to the other computer and each character you "receive" from the other computer is displayed on your screen

While in the terminal mode, you can use the following special function keys:

Prev *(F1)* To see the previous screen.

Down *(F2)* To save all transmitted information into a text file.

Up *(F3)* To send the information stored in a text file.

Full *(F4)* To switch between the full-duplex and half-duplex echo modes.

Echo *(F5)* To print all transmitted information on the printer.

BRK *(F7)* To send a special 250 millisecond break signal, required by some host computers.

Bye *(F8)* To disconnect fro the terminal mod and return to the interactive mode.

Reference B/ TELCOM Codes

This reference lists all the codes that TELCOM can send and receive. It contains 3 tables. The first table lists 128 ASCII codes, the second lists 128 ASCII extension codes, and the third lists sequence codes.

In each table: Column 1 lists the codes in decimal notation, Column 2 lists the codes in hexadecimal notation, Column 3 lists the codes in binary notation, Column 4 gives the keyboard character that you need to press to send a code to the other computer, and Column 5 gives TELCOM's interpretation of a code received from the other computer.

Table 1. ASCII Codes

Decimal	Hex	Binary	Printed Character	Keyboard Character
0	00	00000000		CTRL @
1	01	00000001		CTRL A
2	02	00000010		CTRL B
3	03	00000011		CTRL C
4	04	00000100		CTRL D
5	05	00000101		CTRL E
6	06	00000110		CTRL F
7	07	00000111	bell	CTRL G
8	08	00001000	backspace	CTRL H
9	09	00001001	tab	CTRL I
10	0A	00001010	line feed	CTRL J
11	0B	00001011	cursor home	CTRL K
12	0C	00001100		CTRL L
13	0D	00001101	carriage return	CTRL M
14	0E	00001110		CTRL N
15	0F	00001111		CTRL O
16	10	00010000		CTRL P
17	11	00010001	XON	CTRL Q
18	12	00010010		CTRL R
19	13	00010011	XOFF	CTRL S
20	14	00010100		CTRL T
21	15	00010101		CTRL U
22	16	00010110		CTRL V
23	17	00010111		CTRL W
24	18	00011000		CTRL X
25	19	00011001		CTRL Y
26	1A	00011010	EOF	CTRL Z
27	1B	00011011		ESC
28	1C	00011100		→
29	1D	00011101		←
30	1E	00011110		↑
31	1F	00011111		↓
32	20	00100000		SPACEBAR
33	21	00100001	!	!
34	22	00100010	"	"
35	23	00100011	#	#
36	24	00100100	$	$
37	25	00100101	%	%
38	26	00100110	&	&
39	27	00100111	'	'
40	28	00101000	(	(
41	29	00101001	)	)
42	2A	00101010	*	*
43	2B	00101011	+	+
44	2C	00101100	,	,
45	2D	00101101	–	–
46	2E	00101110	.	.
47	2F	00101111	/	/
48	30	00110000	0	0
49	31	00110001	1	1
50	32	00110010	2	2
51	33	00110011	3	3
52	34	00110100	4	4
53	35	00110101	5	5
54	36	00110110	6	6
55	37	00110111	7	7
56	38	00111000	8	8
57	39	00111001	9	9
58	3A	00111010	:	:
59	3B	00111011	;	;
60	3C	00111100	<	<
61	3D	00111101	=	=
62	3E	00111110	>	>
63	3F	00111111	?	?
64	40	01000000	@	@
65	41	01000001	A	A
66	42	01000010	B	B
67	43	01000011	C	C
68	44	01000100	D	D
69	45	01000101	E	E
70	46	01000110	F	F
71	47	01000111	G	G
72	48	01001000	H	H
73	49	01001001	I	I
74	4A	01001010	J	J
75	4B	01001011	K	K

Decimal	Hex	Binary	Printed Character	Keyboard Character
76	4C	01001100	L	L
77	4D	01001101	M	M
78	4E	01001110	N	N
79	4F	01001111	O	O
80	50	01010000	P	P
81	51	01010001	Q	Q
82	52	01010010	R	R
83	53	01010011	S	S
84	54	01010100	T	T
85	55	01010101	U	U
86	56	01010110	V	V
87	57	01010111	W	W
88	58	01011000	X	X
89	59	01011001	Y	Y
90	5A	01011010	Z	Z
91	5B	01011011	[	[
92	5C	01011100	\	(GRPH) -
93	5D	01011101	]	]
94	5E	01011110	^	^
95	5F	01011111	_	_
96	60	01100000	`	(GRAPH) [
97	61	01100001	a	A
98	62	01100010	b	B
99	63	01100011	c	C
100	64	01100100	d	D
101	65	01100101	e	E
102	66	01100110	f	F
103	67	01100111	g	G
104	68	01101000	h	H
105	69	01101001	i	I
106	6A	01101010	j	J
107	6B	01101011	k	K
108	6C	01101100	l	L
109	6D	01101101	m	M
110	6E	01101110	n	N
111	6F	01101111	o	O
112	70	01110000	p	P
113	71	01110001	q	Q
114	72	01110010	r	R

115	73	01110011	s	S
116	74	01110100	t	T
117	75	01110101	u	U
118	76	01110110	v	V
119	77	01110111	w	W
120	78	01111000	x	X
121	79	01111001	y	Y
122	7A	01111010	z	Z
123	7B	01111011	{	(GRPH) 9
124	7C	01111100	¦	(GRPH) _
125	7D	01111101	}	(GRPH) 0
126	7E	01111110	~	(GRPH)]
127	7F	01111111		(DEL)

Table 2. ASCII Extension Codes

Decimal	Hex	Binary	Printed Character	Keyboard Character
128	80	10000000	☎	(GRPH) p
129	81	10000001	▲	(GRPH) m
130	82	10000010	⁽x	(GRPH) f
131	83	10000011	⁾	(GRPH) x
132	84	10000100	✱	(GRPH) c
133	85	10000101	✝	(GRPH) a
134	86	10000110	☗	(GRPH) h
135	87	10000111	▼	(GRPH) t
136	88	10001000	π	(GRPH) l
137	89	10001001	√	(GRPH) r
138	8A	10001010	≠	(GRPH) /
139	8B	10001011	Σ	(GRPH) s
140	8C	10001100	≈	(GRPH) '
141	8D	10001101	±	(GRPH) =
142	BE	10001110	∫	(GRPH) i
143	BF	10001111	◀	(GRPH) e
144	90	10010000	⚲	(GRPH) y
145	91	10010001	⚲	(GRPH) u
146	92	10010010	↕	(GRPH) ;
147	93	10010011	🚹	(GRPH) q
148	94	10010100	🚺	(GRPH) w
149	95	10010101	♂	(GRPH) b
150	96	10010110	♀	(GRPH) n
151	97	10010111	⅍	(GRPH) .
152	98	10011000	↑	(GRPH) o
153	99	10011001	↓	(GRPH) ,
154	9A	10011010	→	(GRPH) l
155	9B	10011011	←	(GRPH) k
156	9C	10011100	♧	(GRPH) 2
157	9D	10011101	♢	(GRPH) 3
158	9E	10011110	♡	(GRPH) 4
159	9F	10011111	♤	(GRPH) 5
160	A0	10100000	˙	(CODE) '
161	A1	10100001	à	(CODE) x
162	A2	10100010	ç	(CODE) c
163	A3	10100011	£	(GRPH) 8
164	A4	10100100	˙	(CODE) "
165	A5	10100101	µ	(CODE) M
166	A6	10100110	°	(CODE))
167	A7	10100111	▼	(CODE) _
168	A8	10101000	†	(CODE) +
169	A9	10101001	§	(CODE) s
170	AA	10101010	R	(CODE) R
171	AB	10101011	C	(CODE) C
172	AC	10101100	¼	(CODE) p
173	AD	10101101	¾	(CODE) ;
174	AE	10101110	½	(CODE) /
175	AF	10101111	¶	(CODE) 0
176	B0	10110000	¥	(GRPH) 7
177	B1	10110001	Ä	(CODE) A
178	B2	10110010	Ö	(CODE) O
179	B3	10110011	Ü	(CODE) U
180	B4	10110100	¢	(GRPH) 6
181	B5	10110101	-	(CODE) [
182	B6	10110110	ä	(CODE) a
183	B7	10110111	ö	(CODE) o
184	B8	10111000	ü	(CODE) u
185	B9	10111001	ß	(CODE) S
186	BA	10111010	™	(CODE) T
187	BB	10111011	é	(CODE) d
188	BC	10111100	ù	(CODE) ,
189	BD	10111101	è	(CODE) v
190	BE	10111110	¨	(CODE) =
191	BF	10111111	£	(CODE) F
192	C0	11000000	â	(CODE) l
193	C1	11000001	ê	(CODE) 3
194	C2	11000010	î	(CODE) 8
195	C3	11000011	ô	(CODE) 9
196	C4	11000100	û	(CODE) 7
197	C5	11000101	ˆ	(CODE) –
198	C6	11000110	ë	(CODE) e
199	C7	11000111	ï	(CODE) i
200	C8	11001000	á	(CODE) q
201	C9	11001001	í	(CODE) k
202	CA	11001010	ó	(CODE) l
203	CB	11001011	ú	(CODE) j
204	CC	11001100	ÿ	(CODE) y
205	CD	11001101	ñ	(CODE) n
206	CE	11001110	ã	(CODE) z

Decimal	Hex	Binary	Printed Character	Keyboard Character
207	CF	11001111	ō	CODE .
208	D0	11010000	Æ	CODE !
209	D1	11010001	æ	CODE #
210	D2	11010010	À	CODE '
211	D3	11010011	à	CODE (
212	D4	11010100	Ø	CODE &
213	D5	11010101	ø	CODE I
214	D6	11010110	Ñ	CODE E
215	D7	11010111	É	CODE D
216	D8	11011000	Á	CODE Q
217	D9	11011001	Í	CODE K
218	DA	11011010	Ó	CODE L
219	DB	11011011	Ú	CODE J
220	DC	11011100	¿	CODE Y
221	DD	11011101	Ù	CODE <
222	DE	11011110	È	CODE V
223	DF	11011111	Ä	CODE X
224	ED	11100000		GRPH Z
225	E1	11100001	▘ (upper left)	GRPH !
226	E2	11100010	▝ (upper right)	GRPH @
227	E3	11100011	▖ (lower left)	GRPH #
228	E4	11100100	▗ (lower right)	GRPH $
229	E5	11100101	▚	GRPH %
230	E6	11100110	▞	GRPH '
231	E7	11100111	▔ (upper)	GRPH Q
232	E8	11101000	▁ (lower)	GRPH W
233	E9	11101001	▏ (left)	GRPH E
234	EA	11101010	▕ (right)	GRPH R
235	EB	11101011	▛	GRPH A
236	EC	11101100	▜	GRPH S
237	ED	11101101	▙	GRPH D
238	EE	11101110	▟	GRPH F
239	EF	11101111	▌	GRPH X
240	F0	11110000	┌	GRPH U
241	F1	11110001	─	GRPH P
242	F2	11110010	┐	GRPH O
243	F3	11110011	┬	GRPH I
244	F4	11110100	├	GRPH J
245	F5	11110101	│	GRPH :
246	F6	11110110	└	GRPH M
247	F7	11110111	┘	GRPH >
248	F8	11111000	┴	GRPH <
249	F9	11111001	┤	GRPH L
250	FA	11111010	┼	GRPH K
251	FB	11111011	◤	GRPH H
252	FC	11111100	◢	GRPH T
253	FD	11111101	◥	GRPH G
254	FE	11111110	◣	GRPH Y
255	FF	11111111	▩	GRPH C

Table 3. ASCII Sequence Codes

Decimal	Hex	Keyboard Character	Printed Character
27,65	1B,41	ESC A	Move cursor up one line.
27,66	1B,42	ESC B	Move cursor down one line.
27,67	1B,43	ESC C	Move cursor right one space.
27,68	1B,44	ESC D	Move cursor left one space.
27,72	1B,48	ESC H	Home cursor (moves cursor to top left corner).
27,73	1B,49	ESC I	Answerback.
27,74	1B,4A	ESC J	Erase to end of screen.
27,75	1B,4B	ESC K	Erase to end of line.
27,76	1B,4C	ESC L	Insert line.
27,77	1B,4D	ESC M	Delete line.
27,80	1B,50	ESC P	Turn cursor on.
27,81	1B,51	ESC Q	Turn cursor off.
27,84	1B,54	ESC T	Set system line.
27,85	1B,55	ESC U	Reset system line.
27,86	1B,56	ESC V	Disable video.
27,87	1B,57	ESC W	Enable video
27,89 *r,c*	1B,59 *r,c*	ESC Y *r,c*	Move cursor to specified row/column position.
27,106	1B,6A	ESC j	Clear screen.
27,108	1B,6C	ESC l	Erase entire line.
27,112	1B,70	ESC p	Enter reverse video mode.
27,113	1B,71	ESC q	Exit reverse video mode.

Reference C/ Help

Communication problems are caused by many factors: a bad telephone line, a defective cable, an improper connection of a cable, a mismatch of communication parameters, a switch set incorrectly, or a disagreement between TELCOM and the other computer on codes.

This reference helps isolate what is causing a certain problem and suggests ways to correct the problem. It is contains 4 sections: "Problems with the Connection," "Problems with the Characters You Receive," "Problems with the Characters You Type," and "Problems with Using the Upload and Download Keys." For a better understanding of what causes communication problems, read Chapter 7, "Which Computers Can Communicate with TELCOM."

Problems with the Connection

Cannot establish a connection. If TELCOM does not show its terminal function-key display (Prev, Down, Up, Full, Echo, BRK, Bye), you have not established a connection. See Chapter 2 if you are attempting to connect to a public computer service. See Chapter 9, 10, or 11 if you are attempting to connect to a private computer.

Transmission is stopping and restarting for no reason. This may be because TELCOM's start/stop protocol is enabled and the other computer does not recognize the same protocol. Disconnect and set TELCOM's start/stop parameter to "D", as described in Chapter 8.

Communication hangs-up. This may be because TELCOM's start/stop protocol is enabled and the other computer does not recognize the same protocol. Disconnect and set TELCOM's start/stop parameter to "D", as described in Chapter 8.

The message "Lost Carrier" appears. The other computer is no longer on the telephone line. Disconnect and try the connection again.

Problems with Characters You Receive

You receive many strange characters. This could be caused by either of these factors:

- A mismatch of word length, parity, stop bit. Disconnect and reset TELCOM's parameters to match the other computer, as described in Chapter 8.
- A mismatch of baud rates. If using the built-in modem, you can use only 1 baud rate—300 baud. The other computer must also use 300 baud. If using the RS-232, you need to disconnect and set the RS-232 baud rate to match the baud rate used by the other computer, as described in Chapter 8.

You receive occasional strange characters. This could be caused either of these factors:

- A bad telephone connection. Disconnect and try the connection again.
- A disagreement between TELCOM and the other computer on the meaning of control, extension, or sequence codes. You may be able to solve this problem by turning on TELCOM's control code filter, as described in Chapter 8. If this does not work, perhaps the other computer has a way to avoid sending you the codes that are causing the problems. (See Chapter 7 and Reference B for information on TELCOM's codes.)

The lines you receive are printing on top of each other. This is caused by a disagreement between you and the other computer on whether to send line feeds after carriage returns. Disconnect and and reset TELCOM's line feed parameter to "I", as described in Chapter 8.

The lines you receive are double spacing. This is caused by a disagreement between you and the other computer on whether to send line feeds after carriage returns. Disconnect and reset TELCOM's line feed parameter to "N", as described in Chapter 8.

The lines you receive are scrolling off the screen faster than you can read them. Try either of the following:

- Press (F1) to see the previous screen. Press (F1) again to see the current screen.
- Press (CTRL) (S) to temporarily stop transmission; then (CTRL) (Q) to restart transmission. (This works only if the other computer recognizes the start/stop protocal and if the TELCOM's start/stop parameter is set to "E", as described in Chapter 8.)

Problems with Characters You Type

The characters you type appear in duplicate. Press (F4) to change from "Half" to "Full".

The characters you type are not displayed. Press (F4) to change from "Full" to "Half".

The characters you type appear differently on your display. The host computer is echoing back the characters it is receiving from you, and they are different from the characters you are typing. This could be caused by either of these factors:

- A bad telephone line. Disconnect and try the connection again.
- A mismatch of word length, parity, stop bit, or baud rate parameters. Disconnect and reset these parameters, as described in Chapter 8.
- A mismatch of baud rates. If using the built-in modem, you can use only 1 baud rate—300 baud. The other computer must also use 300 baud. If using the RS-232, you need to set the RS-232 parameter to the baud rate that the other computer is using, as described in Chapter 8.

The stop/start characters you send do not work. This could be caused by these factors:

- TELCOM's stop/start protocal is not enabled. Disconnect and set TELCOM's start/stop protocal to "E", as described in Chapter 8.
- The other computer does not use the start/stop protocal. You cannot use the stop/start characters with this computer.
- The other computer and TELCOM use different start/stop characters. You cannot use the start/stop characters with this computer.

A control character does not work. This is because TELCOM and the other computer disagree on the meaning of the control code. (See Chapter 7 and Reference B for a description of TELCOM's codes.)

The lines you type are printing on top of themselves. TELCOM does not have a way of adjusting this.

Problems with the Upload and Download Keys

Upload function prints "No file" error after you type the file name. You can upload only text files (files with a .DO extension). See chapter 12 for information on how to convert files Multiplan files and BASIC files to text files to .DO files.

Download function turns off. The Tandy 200 has no more memory available for storing the file.

Index

ASCII codes 41, 80
Acoustic coupler 10, 52
Asynchronous transmission 41
Backspace 66
BASIC files 69
Baud
  Setting 46
  TELCOM convention 38
Bits per second (bps) *See* Baud
Built-in modem *See* modem
Codes
  ASCII 41, 80
  Control code filter 48
  Other 42, 84
  Sending control codes 66
  Sequence 42, 88
CompuServe
  Accessing 11
  Autologon sequence 31
  Disconnecting 14
  EMAIL 22
  Retrieving information 17
  Sending electronic mail 21
  Subscribing 4
  Using pages 18
Connection
  Built-in modem 51-55
  Bulletin board 25
  Cable (RS-232) 57-60
  External modem 61-64
  Public-access computer 11-14
Control character parameter 48
Converting files
  Multiplan files 68
  BASIC files 68
Datapac 4-5
Deskmate, sample session
Dialing parameter 49
Dow Jones
  Autologon sequence 31
  Subscribing 5
  Accessing 12
  Disconnecting 14
Echo 40
Electronic Mail 7
External modem *See* modem
File transfer 42-43, 65-69
Full duplex 40
Half duplex 40
Help 89
Host computer 38
Library Services 6
Line feed parameter 48
Modem
  Cable 10, 52
  Connection, built-in 12, 51-55
  Connection, external 61-64
  Signals 39
Multiplan files 68
Networks, public 4
News Services 6
Parity
  Meaning 41
  Setting 47, 15
Private computers 35-76
Problems See Help
Public-access computers 1-33
  Bulletin boards 25
  Connecting 9
  Disconnecting 14
  Printing online information 20
  Saving online information (download) 20

Seeing the previous screen 20
Sending a break signal 20
Sending information (upload) 23
Setting parameters 15
Subscribing 3
RS-232 39-40, 57-60, 63
Sequence codes 42
Stop bit
Meaning 41
Setting 47, 15
Synchronous transmission 41
Tandy 16, sample session 72
Tandy 1000, sample session 74
TELCOM
Autologon sequences 29-33
Codes 79
Communication conventions 37-43
Download 20, 66, 68
Paramaters 15, 45-49
Previous screen 20, 66
Print 20, 66
Start/Stop 19, 47, 66
Summary 78
Upload 66
Telenet 4-6,
Telex Networks 7
Terminal 38
The Source
Accessing 13
Autologon sequence 31
Disconnecting 14
Subscribing 6
Transmission 41
Tymnet 4-5
Uninet 6
Word length
Meaning 41
Setting 47, 15
Xenix, sample session 72

RADIO SHACK

A Division of Tandy Corporation
U.S.A.: Fort Worth, Texas 76102
CANADA: Barrie, Ontario L4M 4W5

TANDY CORPORATION

AUSTRALIA
91 Kurrajong Road
Mount Druitt, N.S.W. 2770

BELGIUM
Pare Industriel De Naninne.
5140 Naninne

U.K.
Bilston Road Wednesbury
West Midlands WS10 7JN

2A5 KTX1000 * 05 Printed in Japan